88

Old Seismic Bulletins to 1920: A Collective Heritage from Early Seismologists

Johannes Schweitzer
NORSAR, Kjeller, Norway
W. H. K. Lee
US Geological Survey, Menlo Park, California, USA (retired)

1. Introduction

Scientists began systematic instrumental observation of earthquakes in the latter part of the 19th century. Several authors (e.g., Ehlert, 1898; Berlage, 1930; Dewey and Byerly, 1969; and Ferrari, 1990, 1992) describe the history of the development of an adequate instrumentation for seismology. In the 1880s, scientists in Italy, Japan, and Germany began to record more or less continuously the ground motion with their newly developed seismographs (Figure 1). The value of these old seismograms for modern seismology has been emphasized by Kanamori (1988), and many examples can be found in Lee *et al.* (1988). Because of the limited ability to reproduce the original (analog) paper seismograms, seismologists had to describe their observations in words and numbers. It took about 20 years beyond the 1880s to develop an adequate procedure. By the early 1900s, first-order features of the seismic records were deciphered. The recording instruments were able to produce seismograms in which one could distinguish between the onsets of all three wave types (i.e., P, S, and surface waves), and a common vocabulary for the description of these records was developed (Borne, 1904; Chapter 79.24.1 on Handbook CD #2 by Schweitzer). Figures 2 and 3 show early bulletins from Göttingen where Borne developed this notation.

Today, we can follow the developments in early seismology by comparing seismic bulletins; at the beginning in the 1870s, we find phenomenological descriptions of macroseismic effects of earthquakes, and by the late 1890s, we find lists with physically measured parameters (i.e., measured onset times, dominant periods, and amplitudes of seismic waves). Unfortunately, not many of the early seismograms survived, so few are accessible today for reanalysis with modern knowledge about wave propagation in the Earth. The bulletin publications about these early seismograms are therefore often the only source of information we have now. They were "published" in many forms, including handwritten logs (Figure 2), mimeographed sheets (Figure 3), and printed reports (Figure 4), and they were collected in special series of seismic data compilations. In addition, seismic readings and seismograms were often published in various scientific reports after some disastrous earthquakes. For example, Figure 5 consists of three pages taken from Omori (1905) published in Japanese. We translated a few critical words into English and added them in Figure 5. The upper two frames in Figure 5 are seismic readings (for vertical, east–west, and north–south components) for eight earthquakes at the Tainan Observatory (an auxiliary station of the Taihoku Meteorological Observatory, located in the southwestern part of Taiwan). The seventh earthquake (magnitude 6.3, given by Utsu in Chapter 42) occurred on November 6, 1904. Seismograms (east–west component) from Gray-Milne seismographs at five Taiwan stations for this earthquake are shown in the lower frame.

2. The First Earthquake Bulletins

During the last half of the 19th century, scientists in many countries began to systematically collect data of macroseismically observed earthquakes and the locations of these events, known only on the basis of such data. In some countries, scientists and/or their governments established special committees or commissions to do this work.

INTERNATIONAL HANDBOOK OF EARTHQUAKE AND ENGINEERING SEISMOLOGY, VOLUME 81B *ISBN: 0-12-440658-0*

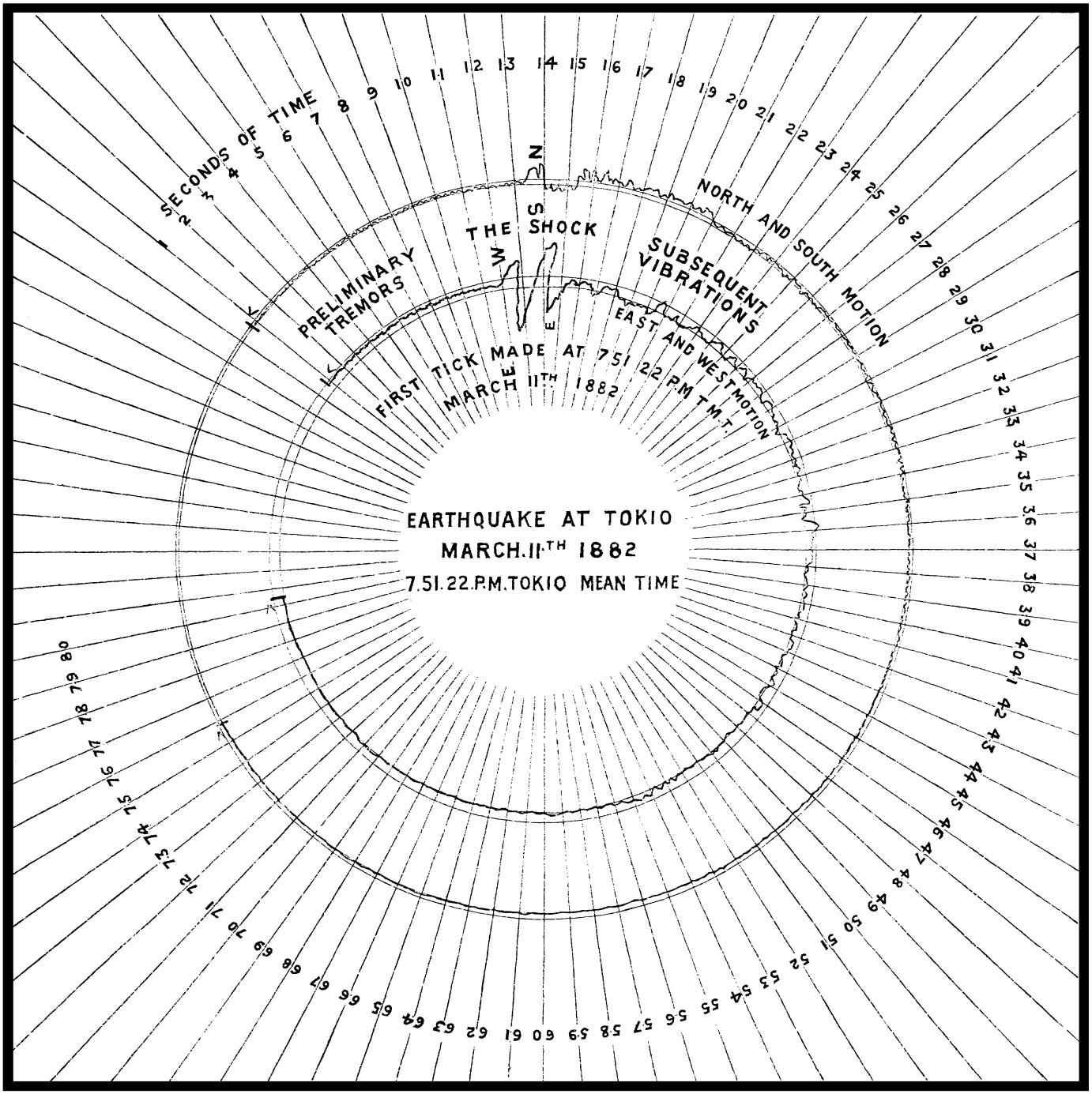

FIGURE 1 One of the oldest seismograms as recorded by Milne in Tokio (Tokyo) in 1882 (an inverted image after Milne, 1883).

2.1 Early Earthquake Observations

As far as we know, the "Erdbebenkommission der Schweizerisch Naturforschenden Gesellschaft" (Earthquake Commission of the Swiss Society for Natural Scientists) was the first such commission, founded in Switzerland in 1878 (Sieberg, 1904; see Chapter 79.51 on Handbook CD #2 by Ansorge *et al.*). These commissions or committees published earthquake lists, often updated every year. After the beginning of instrumental observations of earthquakes with early seismoscopes or seismographs, these lists were improved by adding better source time information (e.g., usually the onset times of the surface wave train at the instrument) and observed maximum amplitudes for locally or regionally recorded earthquakes. These observations were often published together with data from other natural phenomena (e.g., from meteorology or volcanology). Design details of

Geophysikalisches Institut - Göttingen 18.

№ 28. 1911 Juli 10 9h – Juli 17 9h (Greenwich.)

Datum	Ch	Ph	Zeiten (Greenwich) h m s	T s	A mE	A mN	A mZ	Bemerkungen.
Juli 11	I	e	21 41,1	?	–	–	–	
		i	21 44 50	8	–	3,0	2,0	
		L	22					
		F	23¼					
12	II n	e	4 21 16	6?	–	–	–	Herd ca 10000 Km
		iP	21 29	6	2½	2½	10	entfernt.
		P_{R1}	4 25 19	(6)	6,0	6,0	5	
		P_{RII}	4 27 40	6	6,0	6,0	4	
		iS	4 31 27	9	18	5	8	
		PS	4 32 19	8-9	9	14	3	
		S_{RI}?	4 37 51	10-11	5,0	4,0	5,0	Die $S_{RI,II}$ u.s.w sind nicht
		eL	4 49	50				nicht mit Sicherheit zu erkennen.
		M_1	4 51-56	60	450	450	350	bemerkenswert die ausser-
		M_2	4 58	42	280	280	230	ordentlich grosse Periode
		M_3	5 2	30	210	380	200	in M_1 u. M_2.
		M_4	5 8-9	27	360	440	300	
		F	10					
13	I n	e	?					Beginn fällt in den
		eL	9 27,5	20	–	–	–	Bogenwechsel.
		M	9 31,7	18	5	5	7	
		F	10					
14	I	eL	2 38,4	24	7	4	–	andauernde seismi-
		F	3 20					sche Unruhe.

Ansel.

FIGURE 2 An example of a handwritten bulletin from station Göttingen (see number 69 in Table 1) that shows the weekly bulletin number 28 of the year 1911. A. Ansel, who also signed the bulletin, made the analysis. Special results (besides the onset parameter readings) were written in the column "Bemerkungen" (Remarks): on July 12, was an event at approximately 10,000 km distance, for which he observed relative large periods for the surface waves and had problems in identifying the onsets for SS (SRI) and SSS (SRII); on July 13, the first onsets were not analyzed because they arrived at the station during the change of the registration paper; and on July 14, continuing microseisms were observed. Note the delay of about 2 months between the last reported time and the time received by the library of the US Weather Bureau in Washington, D.C.

Geophysikalisches Jnstitut-Göttingen 24

No 37/39 191 September 11 9 h -Oktober 2 9 h (Greenwich-Zeit)

Datum	Ch	Ph	Zeiten h m sec	T sec	A_E μ	A_N μ	A_Z μ	Bemerkungen.
Sept13	I	e	22 34,0	-	-	-	-	
		M?	34,6	14	6	3	-	
		F	42					
15	Iu		13 23 42	4	-	-	1	
		PR1	27 45	4	-	-	1	
		iS	34 43	18	20	5	-	
		eL	50					
		M	14 11,4	20	40	15	20	
		F	16 00					
17	I	e	3 36,4	-	-	-	-	3 Beben mit scharfem
		iP1	37 27	3-4	-	-	2	Einsatz in der ZKom-
		iP2	39 45	4	-	-	2	ponente.Horizentalpen
		iP3	51 24	4	-	-	2	del ausser Betrieb.
22	Ir	iP	5 12 12	4	-	-	2	Starke mikroseismi-
		eL	34,9					sche Bewegung ver
		M	40,7	24	10	12	10	deckt die Einsätzed.
		F	6 50					H.Komp. von P u. S.
26		e	14 46,5					
		M	49,4	20	6	7	-	
		F	15 20					
29		i	12 17,6	6	-	-	3	
		F	30					
								gez. A n s e l .

FIGURE 3 An example of a hand-typed bulletin from station Göttingen (see number 69 in Table 1) that shows the weekly bulletin numbers 37 to 39 (of the year 1911) on one page! During these 3 weeks, only six reportable seismic events were observed at Göttingen. Again, special analysis results are written in the column "Bemerkungen" (Remarks): on September 17, the onsets were described as "three sharp onsets on the vertical component," when the horizontal components were out of operations, and on September 22, the microseisms were so strong that they masked the *P* and *S* onsets on the horizontal components. In this example, the delivery time from Göttingen, Germany, to Washington, D.C., was much faster (about 3 weeks).

RECORDS OF MILNE SEISMOGRAPH NO. 16, AT CHRISTCHURCH, NEW ZEALAND.

Latitude, 43° 31′ 50″ S.; longitude, 172° 37′ 18″ E. Time employed: Greenwich mean civil time.

P.T., preliminary tremors less than 2 mm. complete amplitude; A.T., after-tremors less than 2 mm. complete amplitude; B., E., beginning and end of vibrations not less than 2 mm.; Amp., half-range in millimetres; 1 mm. boom motion = 0″.43. B. and E. signify beginning and end of amplitudes exceeding 1 mm., the range being 2 mm.

C. COLERIDGE FARR, Observer.

Date.		P.T. (from)	B.	Maxima.		Amp.	E.	A.T. (till)	B.P.	Remarks.
				From	To					
1902.						Mm.			Secs.	
Jan.	1	05.44·5	06.09·7	06.16·0	..	5·1	06.23·0	08.40·0	20	
″	2	..	..	15.04·5	15.07·3	1·0	..	..	..	Very sharp tremor.
″	8	23.59·7	..	00.07·7	..	1·1	..	06.47·0	18	Magnetographs much affected from 11 h. 00 m. to 11 h. 39 m.
″	12	22.39·5	23.05·47	23.08·0	..	2·6	23.10·0	00.07·0	18	
″	15	06.30·2	..	06.36·5	..	0·4	..	06.42·0	18	
″	17	06.18·5	..	06.46·8	..	0·4	..	07.18·0	18	
″	18	23.49·3	..	00.09·7	00.28·3	0·3	..	12.39·0	18	
″	21	10.13·0	..	10.22·3	..	0·6	..	10.35·5	18	
″	21	22.32·3	..	22.41·5	..	0·4	..	23.02·0	18	
″	22	06.17·0	..	06.23·0	..	0·3	..	06.28·2	18	
″	24	..	..	10.06·5	..	0·5	..	..	18	Very sharp tremor.
″	24	23.34·7	23.39·7	23.48·6	..	16·7	..	..	18	The largest "shock" recorded to this date, but not felt personally.
				23.49·5	23.51·5	17·0+				
					23.55·6	7·5				
					23.57·8	5·2	23.49·1	27.30·0		
″	26	04.30·7	..	04.36·6	..	0·7	..	04.43·0		
″	26	05.34·0	..	05.36·0	05.41·0	0·3	..	05.44·0	18	
″	28	07.26·0	..	07.28·0	..	0·3	..	..	18	

FIGURE 4 An example of an early seismic station bulletin published in a scientific journal, which shows the bulletin of station Christchurch in New Zealand (see number 143 in Table 1) of January 1902. Note the descriptive character of this early listing without any phase names.

the instruments were also described together with the observations. Thus, we can obtain amplification characteristics for such old instruments, although the instruments themselves may no longer exist (Ferrari, 1990, 1992).

One of the earliest such periodic publications regarding earthquake observations was the "Bolletino del Vulcanismo Italiano," issued in Italy 1874–1911. Then in 1879, the "Uffizio Centrale di Meteorologia e Geodinamica" (Official States Bureau for Meteorology and Geodynamics) was founded in Rome to centralize the earthquake observations for the whole country (Sieberg, 1904).

In Manila, Philippines, the first systematic investigations of earthquakes started in 1865 with the founding of the "Observatorio de Manila" where a "Servicio Seismológico" was established. The monograph "La Seismología en Filipinas" is a good example of the stepwise change of earthquake catalogs from earthquake listings to an early type of station bulletin (Masó, 1895; see Chapter 3 by Udias and Stauder).

The first nationwide working service for earthquake observations in Japan was established after the founding of the Seismological Society of Japan in 1880. Figure 1 shows the seismogram of an earthquake on March 11, 1882, as recorded by John Milne in Tokio (Tokyo), Japan. As far as we know, this is one of the earliest examples of a seismogram, which by chance had been preserved only because it was published in Milne's report to the British Association for the Advancement of Science (Milne, 1883). From 1886 on, the Seismological Society of Japan published their "Seismological Bulletin of Japan." In 1892, the "Shinsai-Yobô-Chôsa-Kwai" (Imperial Earthquake Investigation Committee) was founded, and it published many detailed reports in Japanese and in foreign languages (mostly in English) (Sieberg, 1904; see Chapter 79.33.2 on Handbook CD #2 by Utsu).

In Russia, the Permanent Central Seismic Commission was organized in 1900 under the then Imperial Academy of Sciences of Russia (see Chapter 79.45.1.2 on Handbook CD #2 by Nikolaev and Sedova). This Commission published many important volumes in seismology (including both instrumental and noninstrumental seismic observations) from 1902 to 1919. In particular, many important contributions of Boris Galitzin to modern instrumental seismology were first published in this periodical. Figure 6 shows an example of four seismograms recording the *P* onsets of two different events. Each event is recorded both with his horizontal pendulum and with a new vertical seismometer presented in his paper (Galitzin, 1910). Galitzin commented in particular on the fact that *P* onsets are much more observable on vertical than on horizontal components.

Earthquake commissions, committees, or equivalent institutions were also founded in Austria (1895), in Bulgaria (1892), in some of the German states (Baden, 1880; Bayern, 1879; Württemberg, 1886; and Sachsen, 1875), in Greece (1859), in Hungary (1882), and in Norway (1887) (Sieberg, 1904; Tams, 1950). Before these organizations built their own seismic stations, they collected macroseismic data mostly from the public and regularly published reports about all observed earthquakes.

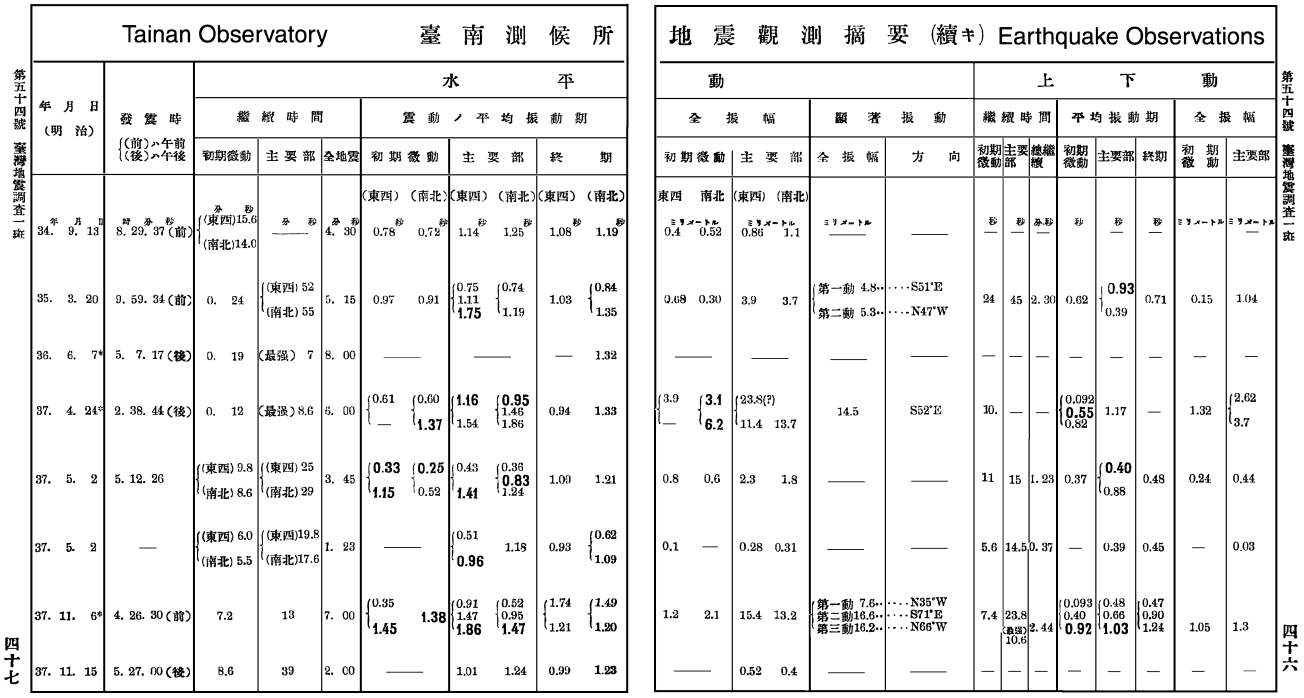

第五十四號 臺灣地震調査一班

Tainan Observatory 臺南測候所

年月日 (明治)	發震時 (前)ハ午前 (後)ハ午後	水平 繼續時間 初期微動	主要部	全地震	震動ノ平均振動期 初期微動 (東西)	(南北)	主要部 (東西)	(南北)	終期 (東西)	(南北)
34. 9. 13	8. 29. 37 (前)	(東西)15.6 (南北)14.0	—	4. 30	0.78	0.72	1.14	1.25	1.08	1.19
35. 3. 20	9. 59. 34 (前)	0. 24	(東西) 52 (南北) 55	5. 15	0.97	0.91	0.75 1.11 **1.75**	0.74 1.19	1.03	0.84 1.35
36. 6. 7*	5. 7. 17 (後)	0. 19	(最强) 7	8. 00	—		—		—	1.32
37. 4. 24*	2. 38. 44 (後)	0. 12	(最强) 8.6	6. 00	0.61 —	0.60 **1.37**	**1.16** 1.54	**0.95** 1.45 1.86	0.94	1.33
37. 5. 2	5. 12. 26	(東西) 9.8 (南北) 8.6	(東西) 25 (南北) 29	3. 45	**0.33** **1.15**	**0.25** 0.52	0.43 **1.41**	0.36 **0.83** 1.24	1.09	1.21
37. 5. 2	—	(東西) 6.0 (南北) 5.5	(東西)19.8 (南北)17.6	1. 23	—		0.51 **0.96**	1.18	0.93	0.62 1.09
37. 11. 6*	4. 26. 30 (前)	7.2	13	7. 00	0.35 **1.45**	**1.38**	0.91 1.47 **1.86**	0.52 0.95 **1.47**	1.74 1.21	1.49 1.20
37. 11. 15	5. 27. 00 (後)	8.6	39	2. 00	—		1.01	1.24	0.99	1.23

地震觀測摘要 (續キ) Earthquake Observations

第五十四號 臺灣地震調査一班

動 全振幅 初期微動 (東西)	(南北)	主要部 (東西)	(南北)	顯著振動 全振幅	方向	上下動 繼續時間 初期微動	主要部	終期	平均振動期 初期微動	主要部	終期	全振幅 初期微動	主要部
0.4	0.52	0.86	1.1	—	—	—	—	—	—	—	—	—	—
0.69	0.30	3.9	3.7	第一動 4.8 第二動 5.3	S51°E N47°W	24	45	2. 30	0.62	**0.93** 0.39	0.71	0.15	1.04
—	—	—	—	—	—	—	—	—	—	—	—	—	—
3.9 —	**3.1** **6.2**	23.8(?) 11.4	13.7	14.5	S52°E	10.	—	—	0.092 **0.55** 0.82	1.17	—	1.32	2.62 3.7
0.8	0.6	2.3	1.8	—	—	11	15	1. 23	0.37	**0.40** 0.88	0.48	0.24	0.44
0.1	—	0.28	0.31	—	—	5.6	14.5	0. 37	—	0.39	0.45	—	0.03
1.2	2.1	15.4	13.2	第一動 7.6 第二動16.6 第三動16.2	N35°W S71°E N66°W	7.4	23.8 (最强) 10.6	2. 44	0.093 0.40 **0.92**	0.48 0.66 **1.03**	0.47 0.90 1.24	1.05	1.3
—		0.52	0.4	—	—	—	—	—	—	—	—	—	—

四十七 四十六

第十七圖

明治三十七年十一月六日激震東西地動計ノ記象

Earthquake on November 6, 1904 (EW Seismograph Records)

FIGURE 5 The upper two frames showing seismic readings for eight earthquakes recorded at the Tainan Observatory. Seismograms from Gray-Milne seismographs at five Taiwan stations for the November 6, 1904, earthquake are shown in the lower frame. See text for more explanations.

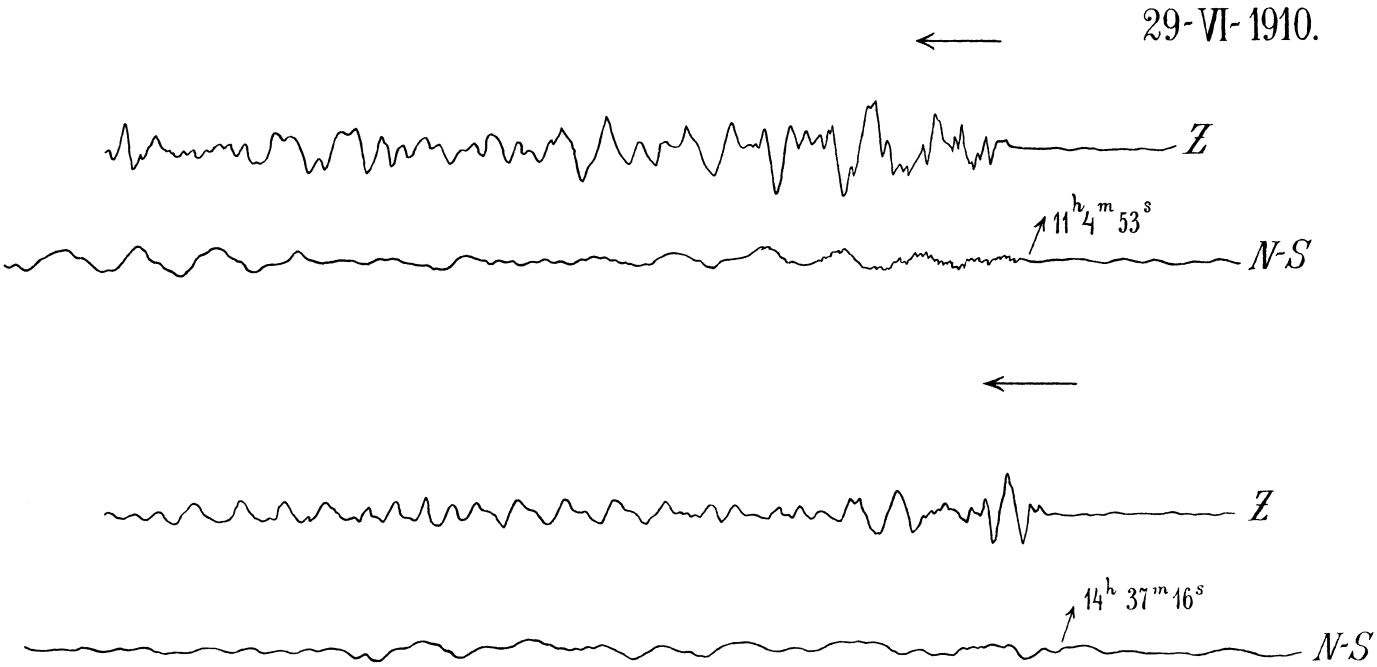

FIGURE 6 Four seismograms showing *P* onsets of two earthquakes recorded with a vertical and a horizontal component of Galitzin seismographs (from Galitzin, 1910).

2.2 The First Teleseismic Observation

During the last decade of the 19th century and the first decade of the 20th century, seismographs became more sensitive, and many seismic stations or observatories were established all over the world. A key discovery was the first observation of a teleseismic signal from an earthquake at about 80° epicentral distance in 1889 by Ernst von Rebeur-Paschwitz (Rebeur-Paschwitz, 1889; Chapter 1 by Agnew; Chapter 79.24.1 by Schweitzer on Handbook CD #2; Chapter 79.33.2 on Handbook CD #2 by Utsu). Rebeur-Paschwitz continued to search for earthquakes and in particular for teleseismic signals in his recordings of ground movement, and in 1892, he published a monograph about his instrument (Rebeur-Paschwitz, 1892). Figure 7 shows a plate with seismograms from this publication.

One important step in the direction of more readable seismograms was the introduction of damping. One of the first seismologists experimenting with damping his horizontal pendulum was Rebeur-Paschwitz (1892). However, the common application of damping came later. As an early example, we show in Figure 8 a plate showing seismograms recorded in 1899 by Emil Wiechert (1899) from regional (his Figures 9–10) and teleseismic (his Figures 11–14) distances. Afterwards, seismologists started to investigate the problems of elastic wave propagation through the Earth and to decipher step by step the principal structure of our planet. For these investigations, all kinds of instrumental earthquake observations were essential, and we can observe an intense international exchange of parameter data of recorded seismograms among many seismic observatories and/or more central institutes for seismological research. In parallel, the network of seismic stations became denser and denser. When the First International Seismological Conference was held in Strasbourg, the participants collected a worldwide list of known seismic stations. A colored map showing the distribution of these stations, with additional information on the type of equipment installed, was published in the proceedings of the conference (Weigand, 1902); we reproduce this map as additional material on the attached Handbook CD #3 (under the directory of \88Schweitzer). According to a listing in Sieberg (1904), at least 108 seismic stations were in operation at the beginning of 1904.

2.3 The BAAS and the "Shide Circulars"

The British Association for the Advancement of Science (BAAS) must be credited for fostering (and providing some financial support for) all kinds of scientific investigations and, in particular, for investigating earthquakes and related phenomena. Committees were appointed, and their reports were systematically published in the annual volumes of the "Report of the British Association for the Advancement of Science" for over 100 years, from 1832 until the early 1950s. Early reports include "Instruments to Record Earthquakes in Scotland and Ireland" (BAAS, 1841, 1842, 1843, 1844), "Facts of Earthquake Phenomena" (BAAS, 1850, 1851, 1852, 1854, 1858), and "Earthquakes and Seismometers" (BAAS, 1854).

Although Milne was teaching in Japan in 1880 (see biography of John Milne in Chapter 89), he persuaded the BAAS to appoint a committee "for the purpose of investigating the earthquake phenomena of Japan." This Committee initially consisted of only two persons: A. C. Ramsay and John Milne (as Secretary), and their reports began to appear in the BAAS Reports (1882).

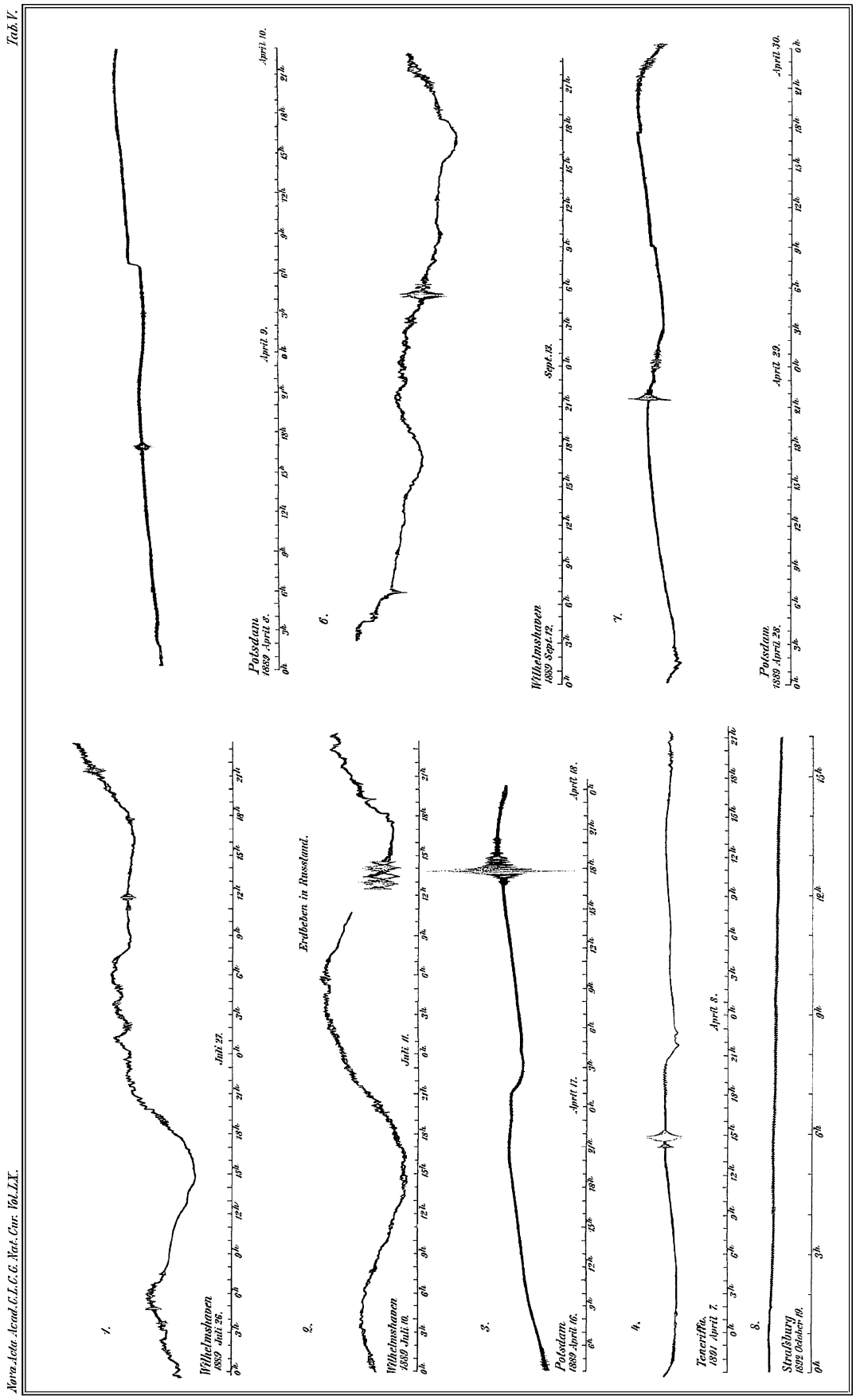

Ex. v. Rebeur-Paschwitz: Das Horizontalpendel. Taf. 5.

FIGURE 7 Plate No. V from Rebeur-Paschwitz (1892) showing early teleseismic observations, including the first known teleseismic seismogram from April 17, 1889 (# 3) as recorded in Potsdam, Germany, and an earthquake in Russia on July 10, 1889 (# 2), observed in Wilhelmshaven, Germany.

Die Zeitangaben beziehen sich auf Göttinger mittlere Zeit.
(Greenwicher mittlere Zeit = Göttinger mittlere Zeit — 89m 46s.)

Erdbebendiagramme.

Die Abbildungen sollen nur eine allgemeine Uebersicht geben. Treue in den Einzelheiten können sie nicht bieten, da sie durch Zinkdruck unter Zwischenschaltung einer Handpause hergestellt wurden. —

Figur 9 ist recht gut gelungen. — In Figur 10 sind die Zacken zu derb und nicht dicht genug beieinander. — Die Figuren 11—14 geben zwar die Hauptbewegungen befriedigend wieder, lassen aber in den Vorläufern viele feine Zacken vermissen und sind in den Ausläufern bei Weitem nicht so regelmäßig wie die Originalphotogramme; hier muß man sich wieder- und wiederkehrende immer schwächer werdende Wellenzüge von ca. $1^1/_2$ mm Wellenlänge denken.

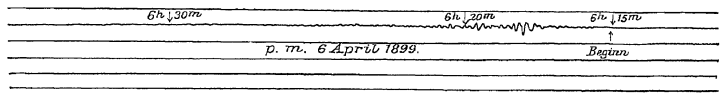

Figur 9.

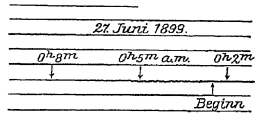

Figur 10.

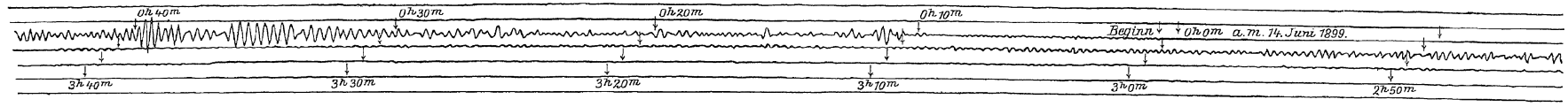

Figur 11.

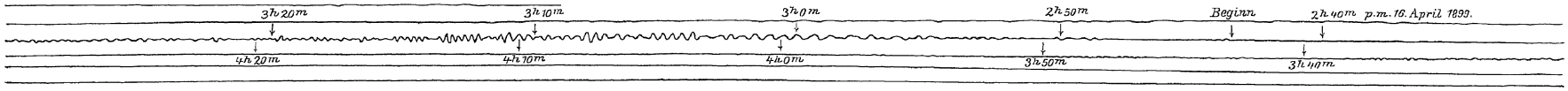

Figur 12.

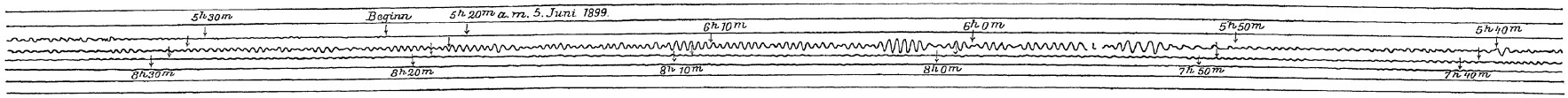

Figur 13.

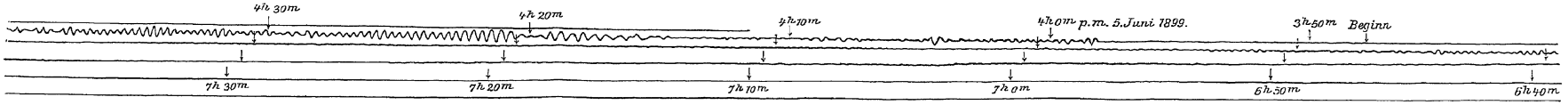

Figur 14.

FIGURE 8 A collection of seismograms published by Wiechert (1899). The seismograms were recorded in Göttingen with a damped horizontal pendulum. Figures 9–10 show regional events, and Figures 11–14 show teleseismic events of unknown source. In the added text (in German), Wiechert wrote that the original seismograms were transferred by hand to the printing plate and that some features of the original records were lost. However, he mentioned that Figure 9 looks very much like the original and that in Figures 11–14 the main character of the records was mostly preserved.

In later years, it became the Committee for the Investigation of Earthquake and Volcanic Phenomena of Japan, and a total of 14 reports were published in the annual volumes of the "Report of the British Association for the Advancement of Science" (BAAS, 1881–1895).

In 1891, the BAAS appointed a committee (with Charles Davison as the secretary) to investigate the earthquake tremors occurring in the British isles and published 5 reports in the annual volumes of "Report of the British Association for the Advancement of Science" (BAAS, 1891–1895). After John Milne returned to England in 1895, these two BAAS committees were combined to form the Committee on Seismological Investigation, with Davison and Milne as secretaries.

John Milne (and Rebeur-Paschwitz in 1895) recognized not only the need to deploy seismographs worldwide to monitor earthquakes but also the need to collect seismic readings for any cooperating stations so that a database is available for earthquake location and seismological research. The first 18 reports of the joint BAAS Committee (BAAS, 1896–1913) were mostly written by John Milne and chronicled the Committee's efforts in establishing the first worldwide seismograph network, collecting the seismic readings and locating the earthquakes. In 1899, the numbers of seismic readings became too great to be published in the BAAS annual volumes; from then on, they were issued as supplements to the Reports and were called the "Shide Circulars." These Circulars (see Figure 9) were collections of bulletins from stations distributed worldwide and mostly equipped with Milne's type of seismographs (see Chapter 4 by Adams). The list of contributing seismic stations changed, but during that time the total number of stations continually increased. Until the end of 1912, the biannual "Shide Circulars" contained seismic readings from about 30 regularly reporting stations, almost all in the then British Empire. However, many of these stations also published their own station bulletins in addition to the "Shide Circulars." As an example, we show in Figure 4 the bulletin of Christchurch, New Zealand, for January 1902.

Despite Milne's urging, fewer than a third of all operating seismic stations worldwide cooperated, as it was a voluntary effort. Furthermore, the "Shide Circulars" contained only onset time readings (and maximum amplitude and duration) from large earthquakes that were observed at several stations. The locations of these events were published in the "Reports of the British Association for the Advancement of Science" as earthquake lists until 1910 (18th Report). These publications stopped in 1913 when John Milne died. Despite their obvious shortcomings, the "Shide Circulars" remain the only continuous compilation of early station bulletins worldwide from 1899 through 1912, and they total over 1,000 pages. Many of these early seismic stations are no longer in existence, and their station bulletins are only accessible through the "Shide Circulars." Even the "Shide Circulars" themselves are difficult to find today in a complete set.

After Milne's death in 1913, the efforts were continued under Turner's leadership (see biography of H. H. Turner in Chapter 89), eventually leading to the publication of the "International Seismological Summary."

2.4 The Central Bureau of ISA

In 1899, the "Kaiserlische Hauptstation für Erdbebenforschung" (Imperial Central Station for Earthquake Research) in Germany was founded in Strasbourg. At this institution and at the later co-located "Zentral-Bureaus der Internationalen Seismologischen Assoziation" (Central Bureau of the International Seismological Association, or ISA), Emil Rudolph and colleagues worked on international earthquake catalogs and bulletins (see Chapter 79.24.1 by Schweitzer on Handbook CD #2). Rudolph was able to compile an initial bulletin with associated observations from several stations for the years 1895–1897 (Rudolph, 1903a, 1903b) and a special catalog for observations at European stations of Japanese earthquakes during the years 1893–1897 (Rudolph, 1904). The next worldwide catalog was compiled for the year 1903 (Rudolph, 1905). In 1907, Elmar Rosenthal published (in the name of the International Seismological Association) the first international bulletin for the year 1904, which was based on seismic data from 139 seismic stations, 54 of them in Japan. The Japanese readings, extended by observations from stations on Formosa (Taiwan), the Philippines, and Indonesia, were used by Rudolph (1907) to compile a special regional catalog of East Asian earthquakes in 1904.

During the following years, Siegmund Szirtes published bulletins for the years 1905–1908. The 1908 list of known seismic stations, published by the ISA, contained 199 entries (Szirtes, 1908), and the catalog (updated in 1912) listed 265 already named stations (Szirtes, 1912c). However, not all of the named stations were regularly reporting seismic readings to the data-collecting organizations. Many stations did not publish their results regularly, and quite a few stations "disappeared" without leaving any useful bulletin materials.

The ISA also systematically collected worldwide macroseismic data. These macroseismic observations were published in bulletin form by Rudolph (1905), Oddone (1907), Christensen and Ziemendorff (1909), Scheu (1911a, 1911b), Scheu and Lais (1912), and Sieberg (1917). However, the production of these bulletins stopped due to World War I and the dissolution of the International Seismological Association (see Chapter 4 by Adams).

2.5 The "International Seismological Summary" (ISS)

After Milne's death in 1913, Herbert Hall Turner continued the work of Milne and published the "Bulletin of the British Association of the Advancement of Science, Seismology Committee" for the years 1913–1917. After World War I, the international cooperation in seismology was reorganized at the International Union of Geodesy and Geophysics (IUGG) conference in Rome (May 1922), and Turner's work was recognized. The newly established Seismology Section of IUGG, which was named the International Association of Seismology (IAS) in 1930 at its General Assembly in Stockholm, asked the British Association to publish an international bulletin in the name of the IAS (see Figure 10 for the first two pages of

British Association for the Advancement of Science.

Circular No. 1, *issued by the Seismological Committee*, Professor J. W. JUDD, *F.R.S.* (*Chairman*), Mr. JOHN MILNE, *F.R.S.*, *Shide, Isle of Wight* (*Secretary*).

CONTENTS.

Registers from similar Horizontal Pendulums (*Milne type*) 1899–1900.

These registers are for the most part continuous with those published by the Seismological Investigation Committee in the Reports of the British Association, 1896 to 1899.

The time employed is Greenwich mean civil time, expressed in hours, minutes, and decimals of minutes.

D. first P.T.'s.—This should refer to the duration of the first preliminary tremors or the first uniform thickening of the trace.

Amplitude indicates half the complete range of the maximum motion. Where this exceeds one millimeter it is expressed in millimeters and in seconds of arc. Values less than one millimeter refer to a thickening of the line, and indicate half its width.

These registers refer to Shide, Kew, San Fernando (Spain), Cape of Good Hope, Mauritius, Cairo, Calcutta, Madras, Bombay, Tokio, and Batavia.

To the Tokio register there is appended a list of local earthquakes, a few of which are common to the records of horizontal pendulums in distant countries.

It is hoped that corresponding registers will be received from Toronto, Victoria (B.C.), Arequipa, Swarthmore College (Philadelphia), Mexico, Cordova (Argentina), New Zealand, Beyrut, Honolulu, Trinidad, and Paisley.

The Register from Shide, Isle of Wight, England.
Observer, JOHN MILNE; *Assistant*, SHINOBU HIROTA.

Shide No.	Date	Commencement	D. of first P.T.'s	Maximum	Amplitude		Total duration	Remarks
				1899.				
		H. M.	M.	H. M.	MM.	SEC.	H. M.	
273	April 4	2 8·5	—	—	0·5	—	0 10	—
274	" 5	24 0·0	—	—	—	—	—	—
		About						
275	" 6	8 34·3	—	—	0·75	—	0 5	—
276	" 7	17 40·5	—	—	0·5	—	0 13	—
277	" 12	16 35·6	—	—	—	—	—	—
278	" 12	18 8·7	9·3	18 25·2	2·0	0·94	2 40	Reinforcement at 20h. 28·4m.
279	" 13	4 28·5	—	4 33·5 4 37·6	1·5	0·70	0 29	Tremors make commencement uncertain.
280	" 13	11 9·8	—	—	—	—	—	—
281	" 15	5 0·0	—	—	—	—	—	—
		About						
282	" 16	14 2·7	15·5	14 18·3 14 21·4	4·5	2·11	1 48	—
283	" 17	2 47·3	14·5	—	0·75	—	0 48	Tremors make commencement uncertain.
284	" 28	20 46·9	—	—	0·75	—	0 12	—
285	May 2	15 32·1	—	—	0·5	—	0 10	—
286	" 8	4 39·1	—	—	0·5	—	1 0	A second max. at 5h. 10·6m.
287	" 14	14 47·3	—	—	0·3	—	0 20	—
288	" 15	13 51·4	—	—	0·5	—	0 28	—
289	" 17	19 54·3	—	20 49·2	0·5	—	1 15	A second max. at 20h. 49·2m.
290	June 4	19 36·5	—	—	0·25	—	0 5	—
291	" 5	4 46·9	6·2	—	2·25	1·05	2 46	—
292	" 5	15 17·7	—	15 39·5	1·25	0·58	0 50	—
293	" 9	12 8·8	—	—	0·25	—	0 50	—
294	" 14	11 21·1	8·0	11 55·2	5·5	2·58	3 0	—
295	" 17	1 22·5	—	—	0·25	—	1 0	—
296	" 19	9 10·8	—	—	0·25	—	0 45	—
297	" 19	12 56·3	—	—	0·25	—	0 15	—
298	" 24	17 56·2	—	—	0·5	—	0 25	—
299	" 29	23 14·3	—	23 59·3	0·5	—	1 5	—
300	July 2	12 59·0	—	—	0·5	—	0 5	—
301	" 2	20 14·5	—	—	0·25	—	0 4	—
302	" 3	16 37·2	—	—	0·25	—	0 4	—
303	" 7	9 25·6	—	—	0·25	—	0 6	—
304	" 8	14 2·4	—	—	0·25	—	0 5	—
305	" 9	19 27·5	—	20 3·7	0·75	—	1 10	—
306	" 10	22 57·5	—	—	0·25	—	0 25	—
307	" 11	7 39·8	15·0	7 54·8	1·0	0·41	1 20	—
308	" 12	1 42·9	—	2 1·9	1·25	0·51	1 20	—
309	" 14	13 36·6	15·6	14 3·6	3·0	1·23	3 0	—
310	" 17	11 17·7	—	—	0·5	—	1 5	—
311	" 17	17 16·7	—	—	0·5	—	0 2	—
312	" 19	12 48·8?	—	—	0·25	—	—	—
313	" 20	10 18·8	—	—	0·5	—	0 45	Time uncertain.
314	" 21	11 54·7	—	—	0·25	—	0 3	—
315	" 26	12 52·3	—	—	0·25	—	0 3	—
316	" 26	15 10·2	—	—	0·25	—	0 3	—

FIGURE 9 The first two pages from No. 1 of the "Shide Circulars."

The International Seismological Summary for 1918.

FORMERLY THE BULLETIN OF THE BRITISH ASSOCIATION SEISMOLOGY COMMITTEE.

This Summary is the continuation of work done in recent years, first at Shide and then at Oxford, but is given a new title in consequence of a resolution of the Seismological Section of the International Union of Geodesy and Geophysics, at its meeting in Rome in May, 1922. At that meeting Professor Rothé, of Strasbourg, was appointed Secretary to the Section, Professor Oddone, of Rome, Vice-President, and Professor Turner, of Oxford, President. The Central Bureau of the Section was, on the motion of the President, placed at Strasbourg, under M. Rothé; but, in moving the resolution, the President expressed the hope that the work of collation of observations, which was already in full swing at Oxford, would not be interrupted, and the Section approved this course. It was, however, suggested by Professor Agamennone that after the completion of the work for the year 1917, already well advanced, the publication should be under the auspices of the Section, instead of, as before, under those of the Seismological Committee of the British Association, and this suggestion was approved. An annual sum of 10,000 francs was voted by the Section towards the expenses of computation and printing. It would only cover part of these expenses, but no more was available at the time.

This Summary may therefore be regarded as the lineal successor of the following publications :—

(*a*) The Shide circulars (Nos. 1-27) for the years 1899-1912, issued by John Milne from the Shide Observatory. These circulars give simply the records of each observatory without any attempt to collate one with another, except that records which had nothing corresponding at any other observatory were generally struck out. To ascertain this correspondence, or the failure of it, a large ledger was kept by Milne, and ultimately epicentres were determined for those shocks which this ledger shewed to be observed at several observatories. These determinations were published in (b).

(*b*) The Reports of the Seismological Committee to the British Association, of which Milne was Secretary, give epicentres and times as follows :—

16th Report (Portsmouth, 1911) gives details for 1899-1903.
17th Report (Dundee, 1912) gives details for 1904-1909.
18th Report (Birmingham, 1913) gives details for 1910.

Milne died in 1913. As Chairman of the B.A. Committee, I took provisional charge of the work at Shide, with the help of Mr. Burgess and Mr. Pring, who had been assisting Milne; and also of Mr. J. J. Shaw, who ultimately succeeded Milne as Secretary to the B.A. Committee. It was determined to replace the circulars by ——

(c) Bulletins giving determinations of epicentres and times, with the resulting distances and azimuths of observatories, and a comparison of their observations with adopted tables. The form of the publication has varied a little; but, up to the present, the following years have been dealt with in this way :—

1913. The whole year published in one volume as "The Large Earthquakes of 1913." (Also in bulletins unreduced.)

1914-1915. Published in separate bulletins, sometimes monthly, sometimes two or three months together.

1916. The whole year published in one volume as "The Large Earthquakes of 1916." At the end of the volume some details are given for smaller earthquakes.

1917. Published in separate bulletins. January and February, March and April, May, June and July, August and September, October to December. In this year, moreover, the smaller earthquakes were definitely included and discussed, and several separate investigations were made or mentioned incidentally (see below).

It will be seen that the years 1911 and 1912 have not yet appeared in any form,* and that a good deal of work might now be done on previous years to bring them up to modern standards. The first duty, however, would seem to be to catch up as soon as possible the arrears from 1918 to date consequent on the War. The postal service was, of course, seriously interrupted during the War, and we are only now receiving some results for 1918, and even 1917. Hence it was impossible to do justice to these years until recently, though several attempts were made, only to be found abortive as new records came in. It is hoped that the work can now go ahead more quickly.

It is not intended to ignore the lists of epicentres and times which have been published elsewhere—as, for instance, in Canada. But so far as we are aware they are not accompanied by a comparison of observations with tables such as will tend ultimately to improve the tables. Even the publications of the former International Seismological Association do not include such comparisons. Indeed they usually omit to define the time at origin, though they give precise epicentres.

* The publications of the former International Seismological Association extend from 1904-1908 only.

FIGURE 10 The first two pages from the introduction of the first issue of the "International Seismological Summary for 1918" by H. H. Turner, summarizing the efforts by the British Association for the Advancement of Science in collecting and analyzing seismic readings around the world.

the introduction by H. H. Turner, and Figure 11 for two sample pages). From the issue for the year 1918, the bulletin was named the "International Seismological Summary," or ISS (Rothé, 1981; Chapter 1 by Agnew; Chapter 4 by Adams; Chapter 79.24.1 on Handbook CD #2 by Schweitzer). The ISS was relatively worldwide in scope, covering the largest events from the beginning of the 1920s, and also contains some smaller and regional events. Then in 1963, the International Seismological Centre (ISC) was organized, and in 1964, the ISS became the "Bulletin of the International Seismological Centre." A summary of the current activities of the ISC is given in Willemann and Storchak (2001). See also Chapter 81.5.

3. The Value of Old Bulletins for Modern Seismology

The earthquake lists and bulletin data from the early seismic stations not only document the history of seismology but also have intrinsic scientific value. When Beno Gutenberg and Charles Francis Richter (see biographies of B. Gutenberg and C. F. Richter in Chapter 89) developed the surface-wave magnitude scale in the late 1930s, they analyzed some original seismograms; in addition, they retrieved amplitude data from numerous station bulletins (because the ISS does not contain the amplitude information). However, since the last edition of their famous book *Seismicity of the Earth* (Gutenberg and Richter, 1954), their published event magnitudes have been recalculated in studies for many regions and for many single events by numerous authors. Even today, these old bulletins are needed for event relocation as our technique for earthquake location improves. They are also useful for magnitude analysis in order to establish a consistent magnitude scale. For example, the very early bulletin data from the mostly undamped seismographs before 1900 can be used to determine event magnitudes (Abe, 1994). For all seismic risk studies, a catalog of earthquakes must be as complete as possible. Here the old bulletins are essential to extend the instrumental observation period as far back in time as possible.

In Chapter 41 of this Handbook, Engdahl and Villasenor present a global earthquake catalog for the period from 1900 through to 1999. However, they could not relocate any earthquake before 1918 because the ISS began in 1918 and the seismic bulletins before 1918 were too difficult to assemble; Gutenberg and Richter (1954) already recognized this problem. We hope that this chapter and the computer files of early seismic bulletin materials up to 1920 will help future research on the pre-1918 earthquakes.

4. The Status of the Collections of Old Seismic Bulletins

As mentioned above, not many of the original seismograms are available today. Since seismic bulletins were often published in small numbers, old seismic bulletins are also difficult to find due to organizational changes at the seismic stations, natural catastrophes, accidents, and wars. Many old seismic stations no longer exist, and the existing stations often do not have a complete set of their own bulletins. Fortunately, the international exchange of bulletins during the early days of seismology led to a worldwide spread of bulletins, and they were collected and are preserved at a few places today.

However, many of these old bulletins are in very bad physical condition due to paper decay and/or damaged due to usage and poor storage conditions. So, an idea came up to preserve these old seismic bulletins, especially from the early days up until 1920. We have tried to obtain the originals or good-quality copies so that they can be scanned into computer image files. One huge collection of old seismic bulletins was accumulated over 30 years by W. H. K. Lee at the US Geological Survey (USGS) in Menlo Park by combining materials from four major collections: (1) Seismology Center of the National Oceanic and Atmospheric Administration (NOAA), (2) New Zealand, (3) St. Louis University, and (4) Seismology Branch of the USGS. Unfortunately, space was no longer available at the USGS in 1996, and only a fraction of this collection (mostly seismic bulletins from before World War II) was saved by storing them at Lee's home. This salvaged collection is now the backbone of a planned scanning project.

Other important sources are the bulletins collected at the University of Hamburg, Germany, in the British National Seismological Archive held at the British Geological Survey (Henni *et al.*, 1999; Lovell and Henni, 1999; Henni *et al.*, 2000); the microfilms of the bulletins held at St. Louis University (Herrmann *et al.*, 1983) before shipping to the USGS; and the bulletins collected in Strasbourg at the former ISA. However, all these collections have many gaps: Some known station bulletins are missing, and the contents of the collection in Strasbourg are still unknown due to lack of manpower and time to make a complete inventory of this archive. During the summer and autumn of 2000, we tried to fill in existing gaps as much as possible and to collect bulletin material from missing stations. All this newly collected material is now stored at NORSAR.

The task to publish a (mostly) complete collection of the bulletin material on the attached CDs in this Handbook became very difficult due to the lack of funding. Some missing material could not be located easily and the old bulletins could not be scanned fast enough, as this project depends on voluntary work. In addition, after the systemic search during the last few years, the available material became far too voluminous to be scanned by one volunteer (Shirley L. Lee) to meet the deadline for this Handbook. Therefore, we decided to document the state of the collection as of December 2002.

Table 1 contains the already collected and the newly located bulletin materials. Many stations published their seismogram readings several times in early weekly or monthly listings, and sometimes also in yearly collections. In this table, only one entry was added per station and time, to indicate for which time period bulletin materials are available. Detailed references of station bulletins are given in the notes at the end of this chapter.

5

1918 JANUARY, FEBRUARY, & MARCH.

Jan. 1d. 15h. 2m. 10s. Epicentre 38°·0N. 23°·5E. (as on 1914 Oct. 17d. 6h.)

	Δ	P.	O−C.	L.	M.
	°	m. s.	s.	m.	m.
Athens	0·2	e 0 4	+1	0·6	0·8
Zagreb	9·6	e 2 32	+8	—	6·0
Helwan	10·4	8 50	?L	(8·8)	—
De Bilt	19·0	—	—	e 10·8	—

Jan. 1d. Records also at 0h. (San Fernando and Eskdalemuir), 7h. (Mizusawa), 12h. (La Paz).

Jan. 2d. Records at 3h. (Algiers), 4h. (De Bilt, Bidston, Rio Tinto, La Paz, and Helwan), 7h. (Helwan), 10h. (La Paz), 18h. and 19h. (Batavia), 20h. and 21h. (Monte Cassino), 23h. (Manila).

Jan. 3d. Records at 0h. (Lick and Eskdalemuir), 4h. (Port au Prince), 6h. and 8h. (Helwan), 13h. (Zi-ka-wei, Manila (3), Bombay, Edinburgh, and Colombo), 14h. (Eskdalemuir, Zagreb, Bidston, and Manila (2)), 15h. (Manila (2)), 16h. (Manila and Harvard), 17h. (Manila (2)), 18h. (Manila (2)), 19h. and 20h. (Manila), 22h. (Manila (3)).

1918. Jan. 4d. 4h. (I) 30m. 5s. (II) 32m. 25s. Epicentre 10°·5N. 91°·0W.

A = −·017, B = −·983, C = +·183 ; D = −1·000, E = +·017 ; G = −·003, H = −·183, K = −·983.

		Δ	Az.	P.	O−C.	S.	O−C.	L.	M.
		°	°	m. s.	s.	m. s.	s.	m.	m.
II	Balboa Heights E.	11·4	97	3 11	+21	—	—	6·6	7·9
II	N.	11·4	97	3 19	+29	—	—	6·7	—
II	Tacubaya	11·9	319	e 2 33	−25	—	—	—	—
I	Vieques	25·9	70	e 6 48	?PR$_1$	—	—	—	—
I	Tucson	28·5	323	e 6 49	+36	12 15	+67	e 15·9	17·3
I	Cheltenham	30·9	22	—	—	12 53	+63	e 16·5	17·6
I	Georgetown	31·0	21	e 6 57	+19	12 26	+35	e 16·3	—
I	Washington	31·0	21	8 20?	?	13 0	+69	15·7	—
I	Ann Arbor	32·4	10	6 49	−45	13 7	+11	16·7	18·9
I	Ithaca	34·3	19	—	—	—	—	e 16·8	—
I	Toronto	34·7	15	—	—	—	—	e 17·5	—
II		34·7	15	—	—	—	—	e 17·0	18·3
II	La Paz	35·2	140	i 7 38	+23	i 13 34	+36	18·7	19·3
I	Harvard	36·3	25	7 9	−15	12 51	−23	e 16·9	19·6
I	Northfield	37·2	22	—	—	e 12 55	−32	e 18·9	—
I	Ottawa	37·3	18	—	—	e 13 39?	+11	18·9	—
II	Lick	38·3	319	e 7 55	+15	—	—	—	—
II	Berkeley	39·1	319	e 8 9	+22	—	—	—	21·3
I	Victoria	46·5	331	—	—	15 56?	+21	20·0	33·0
II	Honolulu	64·9	289	e 19 35	?S	(19 35)	+11	e 31·9	34·9
II	Coimbra	77·7	50	7 35?	?	21 35?	−22	41·3	43·5
II	Rio Tinto	79·2	53	24 35	?S	(24 35)	+141	—	53·6
II	San Fernando	79·6	55	24 5	?S	(24 5)	+106	43·6	50·1
II	Eskdalemuir	80·1	35	12 12	− 8	22 13	−11	36·6	46·6
I	Edinburgh	80·1	35	21 35	?S	(21 35)	−49	(33·3?)	51·9
II	Bidston	80·3	37	11 35	−46	22 47	+20	—	47·3
II	Granada	81·6	53	12 13	−15	22 5	−37	—	—
I	Kew	82·2	39	—	—	—	—	—	49·9
II	Paris	84·4	41	—	—	e 22 39	−33	39·6	47·6
II	De Bilt	84·9	38	—	—	e 22 47	−31	34·6	49·3
II	Uccle	85·2	39	e 12 29	−20	—	—	e 40·6	—
I	Barcelona	85·3	49	—	—	—	—	41·0	49·9
II	Rocca di Papa	93·0	47	—	—	(e23 53)	−52	23·9	56·2
II	Vienna	93·4	40	e 13 12	−22	—	—	—	—
II	Zagreb N.E.	94·0	42	e 13 14	−24	e 24 15	−41	45·6	56·6
II	N.W.	94·0	42	i 13 20	−18	e 24 11	−45	—	50·6
II	Helwan	111·4	52	28 35	?S	(28 35)	+54	—	—
II	Melbourne	123·2	231	—	—	—	—	e 62·6	68·5
I	Mauritius	148·6	112	—	—	—	—	70·5	78·7

For Notes see next page.

6

NOTES TO JAN. 4d. 4h. (I) 30m. 5s. (II) 32m. 25s.

Additional records: Tucson MN = +17·1m., LN = +10·4m. Vieques eLN = +12·2m., MN = +18·0m. Cheltenham LN = +15·9m., MN = +17·0m. Ann Arbor SN? = +13m.37s., MN = +19·9m., PE = +6m.7s., SE = +12m.25s., LE = +14·6m., M = +18·9m. Toronto (II) Li = +17·6m. La Paz RP = +9m.10s., M = +20·8m. Harvard T_0 = 4h.29m.55s. Ottawa eLN = +16·4m., LN = +23·9m. Victoria L = +26·3m. Coimbra L = +38·6m. San Fernando S = +35m.5s., MN = +49·1m. De Bilt MN = +35·7m. Rocca di Papa MN = +90·4m. Zagreb T_0 = 4h.32m.50s.

1918. Jan. 4d. 15h. 48m. 45s. Epicentre 6°·5S. 153°·5E.

(as on 1913 Sept. 3d. 20h.).

A = −·889, B = +·443, C = −·113 ; D = +·446, E = +·895 ; G = +·101, H = −·051, K = −·994.

	Δ	Az.	P.	O−C.	S.	O−C.	L.	M.
	°	°	m. s.	s.	m. s.	s.	m.	m.
Sydney	27·4	184	10 51	?S	(10 51)	+ 3	14·5	16·4
Riverview	27·4	184	i 6 8	+ 6	i 10 51	− 3	e 14·6	16·2
Melbourne	32·3	193	—	—	12 3	−10	17·2	20·2
Manila	38·5	303	e 7 37	− 5	—	—	—	—
Batavia	46·4	268	e 8 15	−28	—	—	—	—
Zi-ka-wei	48·7	323	e 8 59	+ 1	—	—	—	—
Honolulu	55·1	58	e 15 3	?	e 20 9	?SR$_1$	e 23·0	32·4
Berkeley	89·4	52	—	—	e 30 19	?SR$_1$	—	—
Victoria	90·5	41	37 28	?	—	—	46·3	50·2
Mauritius	93·8	250	40 39	?L	—	—	(40·6)	48·8
Toronto	120·8	42	—	—	—	—	e 66·6	75·2
Helwan	121·0	301	31 15	?	—	—	—	—
Edinburgh	127·3	344	56 15	?L	—	—	(56·2)	87·2
De Bilt	127·5	336	—	—	—	—	59·2	62·3
Bidston	129·4	342	—	—	—	—	—	51·2
La Paz	132·8	120	e 19 37	[+12]	—	—	67·4	72·2

Additional records: Riverview PS = +11m.16s., MN = +16·1m., MZ = +24·0m., T_0 = 15h.48m.56s. Perth (Δ = 43°·3) records merely 16h.3m.50·5s. to 17h.8m.58·2s. De Bilt MN = +65·3m. Eskdalemuir (Δ = 127°·8) records 16h.30m. to 17h.30m.

Jan. 4d. Records also at 0h. (Zagreb), 1h. (Manila (2)), 3h. (Manila), 4h. (Tacubaya), 5h. (La Paz), 6h. (Colombo and Manila (2)), 7h. (Manila (2)), 8h. (Helwan), 11h. (Manila), 13h. (Algiers), 14h. (Manila), 17h. (Manila and Paris), 19h. (Manila and La Paz).

Jan. 5d. Records at 1h. (La Paz), 5h. (Helwan), 7h. (La Paz), 8h. (Helwan), 13h. (Monte Cassino, Helwan, and Manila), 14h. (Manila), 19h. (Helwan, Zagreb, Pola, and La Paz), 21h. (Monte Cassino), 23h. (Manila).

Jan. 6d. Records at 1h. (Manila), 7h. and 14h. (Helwan), 16h. (La Paz and Simla), 21h. (Taihoku), 22h. (Zurich).

Jan. 7d. Records at 4h. (Colombo), 5h. (Edinburgh), 13h. (Algiers), 18h. (Manila and Melbourne), 22h. (Taihoku and Zi-ka-wei), 23h. (Helwan).

Jan. 8d. Records at 0h. (Taihoku), 9h. (Balboa Heights), 10h. (Monte Cassino), 13h. (Helwan), 14h. (Edinburgh), 18h. (La Paz).

Jan. 9d. Records at 3h. (Taihoku and Zi-ka-wei), 4h. (San Fernando and Helwan), 5h. (La Paz), 6h. (Athens), 7h. (Zi-ka-wei), 11h. (Batavia), 19h. (San Fernando).

Jan. 10d. Records at 6h. (Mizusawa), 7h. (Zagreb), 8h. (Algiers), 9h. (Athens, Manila, and Rocca di Papa), 13h. (Manila), 16h. (Colombo), 19h. (La Paz).

Jan. 11d. Records at 1h. (La Paz), 3h. (Colombo), 4h. (Helwan and Colombo), 6h. (Colombo), 7h. (La Paz), 12h. (Riverview and Marseilles), 15h. (Colombo), 17h. (La Paz).

FIGURE 11 Two sample pages from the first issue of the "International Seismological Summary for 1918."

TABLE 1 Early Seismic Stations (Up to 1920) in Our Collections of Seismic Bulletins and Earthquake Lists

	Seismic Station	Coordinates Lat	Coordinates Lon	Country	Time Period
1	Alger, Bousareah	36.80	3.04	Algeria	1910–1920
2	Discovery	−77.84	166.75	Antarctica	1902–1903
3	Chacaritos (Chacarita, Buenos Aires, Buenos Ayres) #	−34.59	−58.48	Argentina	09.1906–10.1906 07.1908–1908
4	Córdoba #	−31.42	−64.20	Argentina	03.1899–01.1905
5	La Plata	−34.91	−57.93	Argentina	11.1907–1920
6	Pilar-Córdoba #, *	−31.67	−63.88	Argentina	03.1905–06.1907 1908–06.1909 1913–1914
7	Southern Andes (Mendoza)	−32.88	−68.85	Argentina	03.1908–1912
8	Adelaide #	−34.97	138.58	Australia	1909–06.1909 06.1910–1915
9	Cocos, Keeling Islands #	−12.20	96.90	Australia	1911, 1913–1914
10	Perth #, *	−31.95	115.84	Australia	10.1901–1911 1913–1915
11	Riverview	−33.83	151.16	Australia	03.1909–1920
12	Sydney #	−33.87	151.20	Australia	07.1906–1920
13	Austria			Austria	1896–1920
14	Graz	47.08	15.45	Austria	1907–1919
15	Innsbruck	47.26	11.38	Austria	1913–1915
16	Judenburg	47.17	14.67	Austria	1916
17	Kremsmünster *	48.06	14.13	Austria	1899–1908
18	Wien (Vienna) *	48.25	16.36	Austria	1905–1920
19	Baku (Bakou, Baky)	40.38	49.87	Azerbaijan	10.1906–1908 1910, 1912–1916
20	Balachany (Balakhan, Balakhany)	40.45	49.92	Azerbaijan	03.1907–1910
21	Šemakha (Chemakha, Shemakha)	40.63	48.63	Azerbaijan	1902–1916
22	Zurnabad (Zournabath, Zuraband)	40.52	46.27	Azerbaijan	12.1908–10.1909 1912
23	D'Uccle *	50.80	4.36	Belgium	1901–1920
24	La Paz	−16.27	−68.12	Bolivia	05.1913–1920
25	Bosnia and Herzegovina			Bosnia and Herzegovina	1896–1912
26	Sarajevo *	43.87	18.43	Bosnia and Herzegovina	1904–1913
27	Fernando de Noronha #	−3.83	−32.42	Brazil	03.1911–1915
28	Rio de Janeiro *	−22.91	−43.17	Brazil	1906–1920
29	Bulgaria			Bulgaria	1901–1912
30	Sofia (Sofija) *	42.69	23.33	Bulgaria	04.1905–1911 04.1916–1920
31	Manitoba (St. Boniface), Winnipeg	49.54	−97.07	Canada	02.1910–1912
32	Ottawa	45.39	−75.72	Canada	1906–?
33	Toronto #, *	43.66	−79.39	Canada	09.1897–1920
34	Victoria, British Columbia #, *	48.52	−123.42	Canada	10.1898–1915
35	St. Vincent (São Vicente) #	16.50	−24.00	Cape Verde	11.1910–06.1912 1913–1914
36	Copiapó	−27.35	−70.35	Chile	Before 1917–?
37	Chile			Chile	1906–1908
38	Santiago de Chile	−33.45	−70.66	Chile	1910–1917 1919–1920
39	Taihoku (Formosa/Taiwan) *	25.07	121.47	China (Taipei)	1897–1920
40	Tsingtau (Qingdao), Kiautschou (Jia zhou)	36.07	120.32	China (Beijing)	1909–03.1910 1911–1913
41	Zi-Ka-Wei (Hsu-chia-hui) *	31.18	121.43	China (Beijing)	1900–1920
42	San José	9.94	−84.08	Costa Rica	?–06.1903
43	Croatia and Slavonia			Croatia	1903, 1906–1920
44	Pula (Pola) *	44.87	13.85	Croatia	1896–1918
45	Rijeka (Fiume) *	45.34	14.39	Croatia	1906–1912
46	Zagreb (Agram) *	45.82	15.98	Croatia	1903, 1906–1920
47	Cheb (Eger)	50.08	12.38	Czech Republic	11.1908–06.1919

(*continued*)

TABLE 1 (*continued*)

	Seismic Station	Coordinates Lat	Coordinates Lon	Country	Time Period
48	Disko (Godhavn)	69.25	−53.53	Denmark (Greenland)	10.1907–05.1912
49	Quito	−0.20	−78.50	Ecuador	1904, 1906
50	Helwan, Abbasia (Abbassieh), Cairo #, *	29.86	31.34	Egypt	10.1899–1920
51	Tartu (Dorpat, Jurjew, Iouriev, Iourïev) *	58.38	26.72	Estonia	1897, 1902–09.1908
52	Fiji	−20.00	178.00	Fiji	1914
53	Besançon	47.25	5.99	France	Before 1917–?
54	Clermont-Ferrand	45.43	2.97	France	11.1913–?
55	France			France	1901–1919
56	Grenoble	45.19	5.74	France	1893–1906
57	Marseille	43.31	5.39	France	10.1910–?
58	Paris (Parc St. Maur)	48.81	2.49	France	06.1909–1920
59	Puy-de-Dôme	45.77	2.97	France	1910–10.1913
60	Strasbourg (Strassburg, Straßburg) #, *	48.58	7.76	France	02.1892–08.1893
					04.1895–1897
					07.1900–03.1904
					05.1905–1916
					1919–1920
61	Akhalkalaki	41.42	43.49	Georgia	04.1903–09.1909
62	Batumi (Batoum, Batum)	41.67	41.64	Georgia	04.1903–09.1909
63	Borjomi (Boržom, Borjom, Borshom)	41.85	43.39	Georgia	1903–09.1909
64	Tbilisi (Tblissi, Tiflis) #, *	41.72	44.79	Georgia	1900–1909
					03.1910–1916
65	Aachen	50.78	6.08	Germany	09.1906–1914
66	Biberach	48.09	9.79	Germany	1914–1917
67	Bochum	51.49	7.23	Germany	12.1909–1921
68	Darmstadt, Jugenheim	49.76	8.65	Germany	1911–1914
69	Göttingen *	51.55	9.96	Germany	01., 07.1903–10.1914
70	Hamburg *	53.56	9.98	Germany	10.1900–1920
71	Heidelberg (Königstuhl)	49.40	8.73	Germany	06.1909–09.1916
72	Hohenheim	48.72	9.22	Germany	04.1905–1920
73	Jena *	50.95	11.58	Germany	04.1905–05.1913
74	Leipzig	51.34	12.39	Germany	03.1902–1910
75	München *	48.15	11.61	Germany	08.1905–1908
					1911–1920
76	Nördlingen	48.85	10.49	Germany	1912–1920
77	Plauen	50.48	12.15	Germany	1906–1910
78	Potsdam #, *	52.38	13.07	Germany	04.1889–09.1889
					1897–01.1898
					01.–03.1899
					04.1902–1920
79	Ravensburg	47.78	9.61	Germany	02.1919–1920
80	Taunus	50.22	8.45	Germany	07.1913–06.1914
81	Wilhelmshaven	53.53	8.15	Germany	04.1889–10.1889
82	Accra (Akkra)	5.52	−0.18	Ghana	1915
83	Athénai (Athens)	37.97	23.72	Greece	1900–10.1915
					07.1918–1920
84	Port-au-Prince	18.56	−72.36	Haiti	1901–1920
85	Budapest *	47.48	19.02	Hungary	1902–11.1920
86	Hungary			Hungary	1885, 1886
					1894–1913, 1920
87	Kalocsa	46.53	18.98	Hungary	1910–1920
88	Reykjavik	64.14	−21.91	Iceland	1910, 1913
89	Bombay (Colaba) #, *	18.90	72.82	India	09.1898–1920
90	Calcutta (Alipore) #, *	22.54	88.37	India	1899–06.1912
					1913–1914
91	Kodaikánal #, *	10.23	77.47	India	02.1900–1920
92	Madras #	13.07	80.25	India	05.1898–11.1899
93	Simla	31.10	77.18	India	06.1905–11.1908
					1914–1916

(*continued*)

TABLE 1 (*continued*)

	Seismic Station	Coordinates Lat	Coordinates Lon	Country	Time Period
94	Indonesia			Indonesia	1881–1920
95	Jakarta (Batavia) #, *	−6.18	106.84	Indonesia	06.1898–1920
96	Koeta Radja (Banda Atjeh, Kutaradja), Sumatra	5.57	95.25	Indonesia	1904
97	Cork #	51.88	−8.47	Ireland	1912–1918
98	Limerick	52.67	−8.63	Ireland	1913–1914
99	Benevento	41.12	14.8	Italy	02.1895–?
100	Casamicciola (Isola d'Ischia) #	40.75	13.90	Italy	02.1895–1897 04.1898–03.1899
101	Catania #, *	37.51	15.10	Italy	04.1895–03.1899 1908–06.1909 1911–1915
102	Chiavari	44.32	9.32	Italy	1913–1914
103	Firenze (Quarto-Castello) *	43.82	11.22	Italy	11.1898–1908
104	Firenze (Querce)	43.79	11.28	Italy	03.1895–1906 1911–1914, 1920
105	Firence (Ximeniano) *	43.78	11.26	Italy	02.1985–1920
106	Genova	44.42	8.92	Italy	02.1895–?
107	Italy			Italy	∼ 1894–1914 1917–1920
108	Messina *	38.20	15.56	Italy	1904–1907
109	Mileto (Morabito)	38.60	16.05	Italy	1908–1912
110	Mineo (Guzzanti)	37.25	14.73	Italy	1895–1910
111	Moncalieri, close to Torino (Turin)	45.00	7.70	Italy	12.1906–1920
112	Monte Cassino (Montecassino)	41.49	13.82	Italy	1911, 1913–1917 1919
113	Padova (Padua)	45.40	11.87	Italy	02.1895–09.1897 1899, 01.–06.1901 01.–06.1902 1903–03.1904 1907–1915
114	Pavia *	45.18	9.17	Italy	02.1895–1897
115	Pisa (Capannoli, Baldini)	43.72	10.38	Italy	1910–1912
116	Portici (Napoli)	40.80	14.33	Italy	02.1895–?
117	Reggio di Calabria	38.10	15.65	Italy	1895–?
118	Rocca di Papa #, *	41.76	12.72	Italy	1895–03.1899 1915
119	Roma	41.90	12.48	Italy	1895–1897 1912–1920
120	Siena	43.32	11.31	Italy	1894–05.1896 01.–06.1897
121	Trieste #, *	45.65	13.76	Italy	1898–1903 1907–1918
122	Valle di Pompei (Pompei)	40.75	14.50	Italy	1908–1920
123	Venezia	45.43	12.34	Italy	1907–1908 1919–1920
124	Japan #			Japan	1899–04.1903
125	Kobe *	34.69	135.18	Japan	1919–1920
126	Mizusawa *	39.13	141.13	Japan	1902–1920
127	Nagasaki	32.73	129.87	Japan	04.1913–1920
128	Osaka *	34.68	135.52	Japan	1882–1920
129	Tokyo, Central Meteorological Office (Hitotsubashi) #	35.69	139.76	Japan	05.1895–12.1896 1898–1902, 1904 1920
130	Tokyo, University (Hongo) #, *	35.71	139.76	Japan	07.1899–1920
131	Wjernoje (Vernyï), Alma Ata	43.28	76.94	Kazakhstan	1906–1907
132	Inch'on (Tyosen, Zinsen, Chemulpo, Jinsen)	37.48	126.63	Korea	1918–1920
133	Beirut #	33.90	35.47	Lebanon	1904–06.1910 03.1911–1912 1914

(*continued*)

TABLE 1 (*continued*)

	Seismic Station	Coordinates Lat	Coordinates Lon	Country	Time Period
134	Ksara	33.82	35.89	Lebanon	1|910–1911 1913–1914
135	Valetta #	35.90	14.51	Malta	07.1906–1912 05.1914–04.1916
136	Mauritius (Pamplemousses) #, *	−20.09	57.55	Mauritius	09.1898–1920
137	Mazatlán	23.19	−106.39	Mexico	08.–12.1910
138	México	19.33	−99.19	Mexico	1888–1920
139	Oaxaca	17.02	−96.71	Mexico	08.–12.1910
140	Tacubaya *	19.40	−99.19	Mexico	1906–1912 1917, 1920
141	Yucatán	21.00	−89.00	Mexico	1905–1913
142	De Bilt	52.10	5.18	Netherlands	06.1904–10.1904 04.1908–1920
143	Christchurch #, *	−43.53	172.63	New Zealand	11.1901–1911, 1915
144	Wellington #, *	−41.29	174.77	New Zealand	10.1900–10.1912 1915–12.1920
145	Bergen *	60.38	5.33	Norway	06.1905–1920
146	Norway			Norway	1834–1920
147	Balboa Heights	8.96	−79.56	Panama	03.1915–1920
148	Lima #	−11.97	−77.03	Peru	06.1907–1908 01.–06.1911 1913–1914
149	Manila *	14.58	120.98	Philippines	1868–1895 1898–1920
150	Kraków (Krakau) *	50.06	19.94	Poland	12.1903–1917
151	Krietern-Breslau (Wroclaw)	51.12	17.04	Poland	02.1908–06.1908 09.1909–1910 1912–06.1914
152	Lisboa (Lisbon)	38.72	−9.13	Portugal	1920
153	Ponta Delgada, St. Miguel, Açores #, *	37.74	−25.69	Portugal	07.1903–1915
154	Portugal			Portugal	1903
155	Vieques #, *	18.15	−65.45	Puerto Rico	07.1904–1920
156	Bucharest (Bucarest, Bucureşti, Bucaresci)	44.41	26.10	Romania	05.1903–1911
157	Romania			Romania	1839–1909
158	Timisoara (Temesvar)	45.74	21.22	Romania	1906–1912
159	Derbent	42.00	48.40	Russia	04.1905–09.1909
160	Ekaterinburg (Ekaterinbourg, Jeckaterinburg, Sverdlovsk)	56.81	60.64	Russia	1907–09.1908 1913–1914
161	Irkutsk (Irkoutsk) #, *	52.27	104.31	Russia	12.1901–03.1909 1912–1915
162	Kabansk (Kamensk)	52.05	106.62	Russia	1904–09.1908
163	Königsberg (Kaliningrad)	54.83	20.50	Russia	04.1912–05.1914
164	Krasnojarsk (Krasnoïarsk)	56.02	92.87	Russia	1903–1906
165	Maritouy (Marituj)	51.76	104.11	Russia	11.–12.1908?
166	Pavlovsk (Pawlowsk, near St. Petersburg)	59.68	30.45	Russia	1903–1904 1913–07.1914
167	Pulkovo (Pulkovwa, near St. Petersburg)	59.77	30.32	Russia	12.1906–02.1907 11.1907–05.1908 1911–06.1914
168	Russia			Russia	1902–09.1908 1911–1912
169	Tchita (Tšita)	52.02	113.50	Russia	1904–09.1908
170	Apia *	−13.81	−171.78	Samoa	1905–1920
171	Mahé #	−4.61	55.49	Seychelles	06.1911–1914
172	Hurbanovo (Ógyalla, Stará Ďala) *	47.87	18.19	Slovakia	1902–1912
173	Ljubljana (Laibach) *	46.04	14.53	Slovenia	1897–06.1914
174	Cape of Good Hope (Capetown) #, *	−33.93	18.48	South Africa	07.1899–1915

(*continued*)

TABLE 1 (*continued*)

	Seismic Station	Coordinates Lat	Coordinates Lon	Country	Time Period
175	Cartuja (Granada) *	37.19	−3.60	Spain	1903–09.1916
176	Ebro (Tortosa) *	40.82	0.49	Spain	04.1905–06.1909 1910–1920
177	Fabra (Barcelona)	41.42	2.12	Spain	1907–03.1913 04.1914–1920
178	Puerto Orotava (Puerto de la Cruz), Tenerife	28.42	−16.52	Spain	12.1890–04.1891
179	Río Tinto #	37.77	−6.63	Spain	1911–1915
180	San Fernando #, *	36.47	−6.21	Spain	02.1898–1920
181	Spain			Spain	1899–1928
182	Urania	41.40	2.15	Spain	06.1913–07.1914
183	Colombo #	6.90	79.87	Sri Lanka	1906, 07.1909–1915
184	Uppsala (Upsala) *	59.86	17.63	Sweden	10.1904–05.1905 07.1906–1920
185	Switzerland			Switzerland	1879–1920
186	Zürich	47.37	8.58	Switzerland	11.1911–1920
187	Port of Spain (St. Clair) #, *	10.67	−61.50	Trinidad and Tobago	1901–09.1908 06.1909, 06.1912
188	Harpoot (Harput, Kharput, Kharpert, Elâziğ)	38.72	39.27	Turkey	1907–1909
189	Istanbul (Constantinople)	41.00	29.00	Turkey	1894–04.1896 01.–04.1897
190	Turkey			Turkey	1894–04.1896 01.–04.1897
191	Charkow (Kharkov)	50.00	36.25	Ukraine	04.1894–1897 1909
192	Czernovitz (Czernowitz, Tschernowzy)	48.30	25.93	Ukraine	04.1913–07.1914
193	Lwiw (Lemberg, Lwów)	49.82	24.03	Ukraine	1900–1903 08.1910–1920
194	Makejewka (Makejevka, Makeyevke)	48.03	37.98	Ukraine	03.1912–11.1913
195	Nicolajew (Nikolajew, Nikolaev) #	46.97	31.97	Ukraine	02.1892–1900 1902, 1904–09.1908
196	Uschhorod (Uschgorod, Ungvar, Uzhorod)	48.62	22.30	Ukraine	1911–1912
197	United Kingdom			United Kingdom	1913–1920
198	Ascension Island #	−7.95	−14.35	United Kingdom	11.1910–1914
199	Bidston (Liverpool) #, *	53.40	−3.07	United Kingdom	09.1897–03.1899 1901–1919
200	Duce (Aberdeen)	57.22	−2.17	United Kingdom	1914–1915
201	Blackford Hill (Edinburgh) #, *	55.93	−3.18	United Kingdom	08.1896–04.1898 12.1900–1915
202	Eskdalemuir #	55.31	−3.21	United Kingdom	07.1909–1916 1920
203	Haslemere (Hazlemere, Frensham Hall Observatory) #	51.08	−0.72	United Kingdom	12.1906–1915
204	Kew (London) #, *	51.47	−0.31	United Kingdom	04.1898–1915
205	Newport, Gwent	51.59	3.00	United Kingdom	1914–1915
206	Paisley (Coats Observatory) #, *	55.85	−4.43	United Kingdom	1902–1913
207	Shide, Isle of Wight #, *	50.69	−1.29	United Kingdom	08.1895–1915
208	St. Helena #	−15.92	−5.73	United Kingdom	02.1911–06.1911 1914
209	Stonyhurst College (Blackburn) #	53.84	−2.47	United Kingdom	07.1909–1918 1920
210	United Kingdom			United Kingdom	1889–1907
211	Warley (Birmingham)	52.47	1.88	United Kingdom	1914
212	West Bromwich #	52.52	−1.98	United Kingdom	08.1908–06.1912 1913–1915
213	Woodbridge Hill, Guildford #	51.25	−0.59	United Kingdom	1910–1915
214	Albany, New York	42.65	−73.76	USA	1906–07.1912
215	Ann Arbor, Michigan (Detroit Observatory)	42.28	−83.73	USA	08.1909–1915

(*continued*)

TABLE 1 (*continued*)

	Seismic Station	Coordinates Lat	Coordinates Lon	Country	Time Period
216	Baltimore #, *	39.30	−76.62	USA	04.1901–06.1911 1913
217	Berkeley *	37.87	−122.26	USA	1906, 1910–1920
218	Buffalo (Canisius), New York	42.93	−78.85	USA	10.1910–1911 1915–1920
219	Cambridge, Massachusetts (Harvard University)	42.38	−71.12	USA	04.1908–09.1920
220	Cheltenham, Maryland #, *	38.73	−76.85	USA	12.1904–1920
221	Cleveland, Ohio	41.49	−81.71	USA	1911–03.1916
222	Denver (Sacred Heart), Colorado	39.68	−105.00	USA	10.1909–01.1910 1911–1920
223	Fordham, New York	40.96	−73.89	USA	1915–02.1918
224	Georgetown, Washington, D.C.	38.91	−77.07	USA	1915–1920
225	Honolulu, Hawaiian Islands #, *	21.32	−158.06	USA	04.1903–1920
226	Honolulu, Oahu College, Hawaii #	21.3	−157.9	USA	12.1901–01.1901
227	Ithaca, New York	42.45	−76.48	USA	1912–08.1917
228	Kilauea, Hawaii	19.42	−155.29	USA	From 1914
229	Lawrence, Kansas	38.96	−95.25	USA	03.1915–1920
230	Mobile, Alabama (Spring Hill)	30.69	−88.14	USA	1910–1912 10.1918–1920
231	Mt. Hamilton, California (Lick Observatory)	37.34	−121.64	USA	1901, 06.1903, 1904 05.1911–1915
232	New Orleans (Loyola), Louisiana	29.95	−90.12	USA	1911
233	Northfield, Vermont	44.17	−72.68	USA	1915–1920
234	Santa Clara, California	37.44	−121.95	USA	?.1910–1919
235	Seattle, Washington	47.65	−122.31	USA	From 03.1910
236	Sitka, Alaska #, *	57.06	−135.50	USA	05.1904–1920
237	Spokane (Gonzaga), Washington	47.64	−117.46	USA	?.1910–09.1911
238	St. Louis, Missouri	38.63	−90.23	USA	12.1910–1920
239	Tucson, Arizona	32.31	−110.78	USA	09.1910–1920
240	USA			USA	1897–1906
241	Washington, D.C. *	38.96	−77.06	USA	06.1903, 1904 1906–1907 10.1914–1920
242	Tashkent (Taschkent, Taškent) *	41.33	69.30	Uzbekistan	1902–1909 09.1912–05.1914
243	Belgrad (Beograd, Belgrade) *	44.82	20.46	Yugoslavia	1901–10.1911
244	Serbia			Yugoslavia	1901–1907
245	Binza (Leopoldville)	−4.37	15.25	Zaire	1909–1920

This table contains our knowledge (as of December 2002) about seismic bulletins and earthquake lists. The time period is approximately from the beginning of instrumental readings until the end of 1920, as far as we have them in originals or in copies or as we found them somewhere cited in literature or listed in library catalogs. The names of the seismic stations are listed under their respective countries where they are located today, with the countries alphabetical. However, the names of stations and towns/villages also changed over time. In these cases, we tried to give all name versions used in the bulletins and the current names. For some entries, a country name is used as the station name, which means that during this time period, centralized earthquake lists and/or bulletins were published. The references found and further remarks for each entry are given in the Appendix, Notes for Table 1, at the end of this chapter.

All stations marked with a pound sign (#) contributed their readings at least once to the early bulletins published by the BAAS (BAASRP, 1896–1899, and Shide Circulars, 1899–1912). All stations marked with a star (*) observed the 1906 San Francisco earthquake and contributed a seismogram copy to Reid (1908). A very valuable resource to get an overview of bulletin production and research activities at North American seismic observatories was the 25th-year anniversary commemorative volume of the Jesuit Seismological Association, edited by James Bernard Macelwane, which contains a complete bibliography related to their 18 seismic stations in the United States and Canada (Macelwane, 1950).

The 1906 San Francisco earthquake was observed worldwide at most of the seismic stations. The State Earthquake Investigation Commission compiled observations of this earthquake from 96 stations and published them in a special report (1908) together with copies of the seismograms and station descriptions. We indicate in Table 1 all stations used in this report with an asterisk. However, as mentioned before, not all stations were regularly publishing bulletin data; therefore the list of Reid (1908, Volume II, page 61) contains 18 stations for which we so far have not been able to find bulletins or other

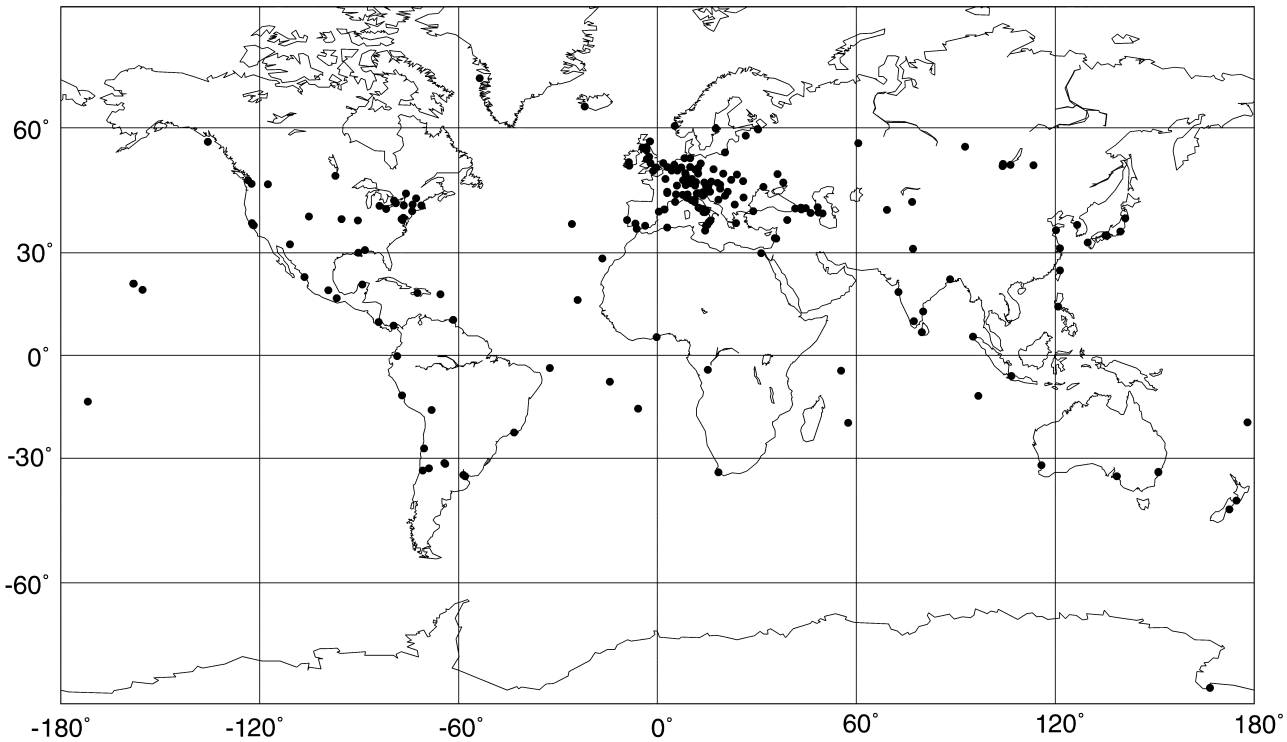

FIGURE 12 A map showing all stations for which we could locate seismic bulletin material with earthquake observations from before 1921.

related material. Figure 12 shows a map with all stations for which we have located bulletin materials (see Table 1 for further details).

5. Samples of Old Seismic Bulletins on the Attached Handbook CD #3

On the attached Handbook CD #3 (under the directory of \88Schweitzer), we included most of the critical materials from the old seismic bulletins up to 1920. Although they constitute only a fraction of the old bulletin materials, these critical materials provide a significant data set of instrumental observations from the 1880s to 1920. Our selected materials are mostly published in English, but some important materials in French, German, Japanese, and Russian are also included.

Our selection criteria are rather subjective, mostly from the information density consideration (i.e., we tried to archive as many seismic readings as possible given a finite amount of space on the CD-ROM). We prefer (1) compilations of multiple station bulletins to single station bulletins and (2) published bulletins to handwritten logs, mimeographed sheets, or preliminary bulletins. However, some seismic bulletins from a few stations of important geographical locations are also included.

5.1 Selections from the BAAS Publications

From the BAAS publications, we selected the following items for scanning and archived the images as computer-readable files on the Handbook CD #3 under the directory of \88Schweitzer:

- "Catalogues of Earthquakes recorded at the Central Meteorological Observatory in Tokio" in the annual BAAS volumes. In 1883, the first of the Gray-Milne seismographs was constructed and began operation in Tokyo, Japan. These catalogs of seismic readings were included in the reports of the BAAS Committee for Investigation of Earthquake Phenomena of Japan, and then in the reports of the BAAS Committee for Seismological Investigation. Only the first catalog was scanned and archived as an example.
- "Report of the British Association for the Advancement of Sciences, Committee on Earth Tremors" (BAAS, 1893). This report contains an appendix, "Account of Observations Made with the Horizontal Pendulum," by Ernst von Rebeur-Paschwitz. This account in English is of great historical interest concerning the first identification of a teleseismic event.
- "Reports of the British Association for the Advancement of Sciences, Committee on Seismological Investigation," 1st Report (1896) to 18th Report (1913).

- "Shide Circulars" for 1899–1912, published by John Milne.
- "Bulletins of the British Association for the Advancement of Sciences—Seismological Committee" for 1913–1917.

5.2 Selections from the ISA Publications

These samples include the bulletin publications of the International Seismological Association before World War I:

- Emil Rudolph (Rudolph, 1903a, 1903b), with seismogram readings for 1895–1898.
- Bulletins published by the ISA for 1904–1908.

5.3 Selection from the ISS

We include on the Handbook CD #3 the first 3 years of the "International Seismological Summary" (1918–1920).

5.4 Selection from the National Bulletin of Italy

From the year 1895 on, the "Regio Ufficio Centrale di Meteorologia e Geodinamica" in Rome started to publish all earthquake observations (microseismical and macroseismical) in Italy as a supplement to the "Bollettino della Società Sismologica Italiana." To document this early national effort, we include on the Handbook CD #3 the whole first volume of this bulletin, containing local, regional, and teleseismic observations in Italy during 1895 (Baratta, 1895).

5.5 Selections from the Publications of the Russian Permanent Central Seismic Commission

In Russia, the Permanent Central Seismic Commission issued a series of publications from 1903 to 1919. We selected all the seismic bulletins for the years 1902, 1911, and 1912. Their data for 1903–1907 were included in the ISA publications. For the year 1908, we have so far found only an incomplete copy, missing the data from the last quarter of the year. We could not find any nationwide Russian seismic bulletins for 1909–1910 or for 1913–1920.

5.6 Selections from the US Weather Bureau Publications

The US Weather Bureau had the official responsibility for earthquake monitoring in the United States from the end of 1914 until 1925 (when the task was transferred to the US Coast and Geodetic Survey). Seismic readings of US stations, as well as of stations in Canada, Puerto Rico, and the Panama Canal Zone, were published monthly in the "Monthly Weather Review." We have selected the Seismology Section of the "Monthly Weather Review" by the US Weather Bureau (1914–1920).

5.7 Selections from Single Station Bulletins

We also included, as examples of single station bulletins, the listings of Göttingen (Germany), Honolulu (Hawaii), La Paz (Bolivia), Osaka (Japan), Sitka (Alaska), and Zi-Ka-Wei (China). We hope to publish all our collected seismic bulletins on CDs in the future after the collection is more complete and the scanning work is finished.

Acknowledgments

We thank all the following friends, colleagues, and station operators who helped us complete the collection of old bulletins by searching their libraries or archives and copying and shipping requested issues: Kayihan Aric, Manfred Baer, Josep Batlló, Wolfgang Brüstle, Thorsten Büßelberg, José Martín Davila, Bruno De Simoni, Bernard Dost, Lawrence Drake, Torild van Eck, Misha Elashvili, Graziano Ferrari, Edmund Fiegweil, Silvia Filosa, Paul Henni, Rolf Herber, Diethelm Kaiser, Rainer Kind, Michael Korn, Ota Kulhanek, Wolfgang Lenhardt, Thomas Meier, Luis Alberto Mendes-Victor, Jose Morales-Sato, Claudia Piromallo, Ines Rio, Joachim Ritter, Eberhard Schmedes, Götz Schneider, Dmitry Storchak, Bernd Tittel, Liane Tröger, Arantza Ugalde, Roland Verbeiren, Erhard Wielandt, and Mladen Živčić. We also wish to thank the staff of the SISMOS Project ("Istituto Nazionale di Geofisica e Vulcanologia"), for allowing us to publish their scanned version of the Italian bulletin of 1895 on the attached Handbook CD#3; Ritsuko S. Matsu'ura, for supplying us with an image file of Omori (1905); and Carl Kisslinger, for making comments on an earlier draft. This is NORSAR contribution No. 717.

References

Abe, K. (1994). Instrumental magnitudes of historical earthquakes, 1892 to 1898. *Bull. Seismol. Soc. Am.*, **84**, 415-425.

BAASSC: See British Association for the Advancement of Science, Seismological Committee (1913-1917).

Baratta, M. (1895). *Notizie sui terremoti avvenuti in Italia durante l'anno 1895*. Regio Ufficio Centrale di Meteorologia e Geodinamica, 230 pp., appendix to *Bollettino della Società Sismologica Italiana*, **1**.

Berlage, H.P. Jr. (1930). Seismometer. In: *Handbuch der Geophysik, Band 4: Erdbeben*. (Gutenberg, B., Ed. and Au.). Verlag Bornträger, Berlin, 299-526.

Borne, G. von dem (1904). Seismische Registrierungen in Göttingen, Juli bis Dezember 1903. *Nachrichten von der Königlichen Gesellschaft der Wissenschaften zu Göttingen*, *Mathematisch-physikalische Klasse*, 440-464.

British Association for the Advancement of Science, Committee on Seismological Investigations (1896). First Report. In: Report of the 1896 Meeting of the British Association for the Advancement of Science, **76**, 180-230. [BAASRP 1896]

British Association for the Advancement of Science, Committee on Seismological Investigations (1897). Second Report. In: Report of the 1897 Meeting of the British Association for the Advancement of Science, **77**, 129-206. [BAASRP 1897]

British Association for the Advancement of Science, Committee on Seismological Investigations (1898). Third Report. In: Report of the 1898 Meeting of the British Association for the Advancement of Science, **78**, 179-276. [BAASRP 1898]

British Association for the Advancement of Science, Committee on Seismological Investigations (1899). Fourth Report. In: Report of the 1899 Meeting of the British Association for the Advancement of Science, **79**, 161-238. [BAASRP 1899]

British Association for the Advancement of Science, Seismological Committee (BAASSC) (1900-1912). Circular Nos. 1-27. These circulars are generally known as the "Shide Circulars."

British Association for the Advancement of Science, Seismological Committee (BAASSC) (1913-1917). [Monthly] Bulletin, 3-month issues between January 1913 and December 1917.

Christensen, A., and G. Ziemendorff (1909). *Les tremblements de terre ressentis pendant l'année 1905*. Publications du Bureau Central de l'Association Internationale de Sismologie, Série B, Catalogues, Strasbourg, 543 pp.

Dewey, J., and P. Byerly (1969). The early history of seismometry (to 1900). *Bull. Seismol. Soc. Am.*, **59**, 183-227.

Ehlert, R. (1898). Zusammenstellung, Erläuterung und kritische Beurtheilung der wichtigsten Seismometer mit besonderer Berücksichtigung ihrer praktischen Verwendbarkeit. *Beiträge zur Geophysik*, **3**, 350-475. This paper is reproduced on the attached Handbook CD #3 (under the directory of \88 Schweitzer).

Ferrari, G., editor (1990). *Gli strumenti sismici storici Italia e contesto europeo—historical seismic instruments, Italy and the European framework*. Istituto Nazionale di Geofisica, Bologna, 198 pp.

Ferrari, G., editor (1992). *Two hundred years of seismic instruments in Italy 1731-1940*. Istituto Nazionale di Geofisica, Bologna, 156 pp.

Galitzin (Golicyn), B. (1910). Ueber einen neuen Seismographen für die Vertikalkomponente der Bodenbewegung. Separatdruck aus den *Nachrichten der Seismischen Kommission*, **IV**, part 2 (*Comptes Rendus des Séances de La Commission Sismique Permanente*, **Tome 4**, Livraison II), 34 pp.

Gutenberg, B., and C.F. Richter (1954). *Seismicity of the Earth and Associated Phenomena*, 2nd edition, revised. Princeton University Press, Princeton, New Jersey, ix + 310 pp.

Henni, P.H.O., J.H. Lovell, and K.I. Lawrie (1999). Seismological bulletins held in the National Seismological Archive (NSA). Version 2. British Geological Survey, Technical Report WL/99/16, Edinburgh.

Henni, P.H.O., J.H. Lovell, and K.I.G. Lawrie (2000). UK historical seismograms and bulletins held in the NSA. British Geological Survey, Technical Report WL/99/21, Edinburgh.

Herrmann, R.B., M. Whittington, and H. Meyers (1983). Historical station bulletin microfilming project, preliminary inventory. National Geophysical Data Center, NOAA, Boulder, Colorado, 59 pp.

International Seismological Summary for . . . , yearly volumes 1918-1962.

ISA: See Christensen and Ziemendorff (1908), Lais (1913), Oddone (1907), Rosenthal (1907), Scheu (1911a,b, 1917), Scheu and Lais (1912), Sieberg (1917), Szirtes (1908, 1909a,b, 1910a,b, 1912a,b, 1913a,b).

ISS: See International Seismological Summary.

Kanamori, H. (1988). Importance of historical seismograms for geophysical research. In: *Historical Seismograms and Earthquakes of the World*, (W.H.K. Lee, H. Meyers, and K. Shimazaki, Eds.). Academic Press, San Diego, pp. 16-23.

Lais, R. (1913). *Catalogue général des tremblements de terre, ressentis par l'homme et registres par des instruments pendant l'année 1907*. Publications du Bureau Central de l'Association Internationale de Sismologie, Série B, Catalogues, Strasbourg.

Lee, W.H.K., H. Meyers, and K. Shimazaki, editors (1988). *Historical Seismograms and Earthquakes of the World.* Academic Press, San Diego. This out-of-print book is reproduced as computer-readable file on the attached Handbook CD #1 (under the directory of \17Lee1).

Lovell, J.H., and P.H.O. Henni (1999). *Historical seismological observatories in the British Isles (pre-1970)*. Version 3. British Geological Survey, Technical Report WL/99/13, Edinburgh.

Macelwane, J.B., editor (1950). *Jesuit Seismological Association 1925-1950, Twenty-Fifth Anniversary Commemorative Volume.* Central Station, Saint Louis University, St. Louis, MO, xi + 347 pp.

Masó, P. Miguel Saderra (1895). *La Seismología en Filipinas—Datos para el estudio de terremotos del Archipiélago Filipino.* Observatorio de Manila, Dirigido por los Padres de la Compañía de Jesús. Tipo-Litográfico de Ramírez y Compañía, Manila, 124 pp. This book is reproduced as computer-readable file on the attached Handbook CD #3 (under the directory of \88Schweitzer).

Milne, J. (1883). Report of the Committee [on the earthquake phenomena of Japan]. In: Report of the Fifty-Third Meeting of British Association for the Advancement of Science Held at Southport in September 1883, pp. 211-215.

Oddone, E. (1907). *Les tremblements de terre ressentis pendant l'année 1904*. Publications du Bureau Central de l'Association Internationale de Sismologie, Série B, Catalogues, Strasbourg, xii + 361 pp.

Omori, F. (1905). On the Formosa earthquakes. Report of the Imperial Earthquake Investigation Committee, No. 54, 223 pp., in Japanese.

Rebeur-Paschwitz, E. von (1889). The earthquake of Tokio, April 18, 1889. *Nature*, **40**, 294-295. This paper is reproduced in Chapter 79.24.1 on Handbook CD #2 by Schweitzer.

Rebeur-Paschwitz, E. von (1892). Das Horizontalpendel und seine Anwendung zur Beobachtung der absoluten und relativen Richtungs-Aenderungen der Lothlinie. *Nova Acta der Ksl. Leop.-Carol. Deutschen Akademie der Naturforscher,* **Band LX**, Nr. 1, Halle, 216 pp.

Rebeur-Paschwitz, E. von (1895). Horizontalpendel-Beobachtungen auf der Kaiserlichen Universitäts-Sternwarte zu Strassburg 1892-1894. *Beiträge zur Geophysik,* **2**, 211-536.

Reid, H.F. (1908). *Mechanics of Earthquakes*. Volume II of: *State Earthquake Investigation Commission (Andrew C. Lawson, Chairman). The California earthquake of April 18, 1906*. Report in two volumes and atlas, Carnegie Institution of Washington, Washington. (This volume was photographically reprinted in 1969.)

Rosenthal, E. (1907). *Katalog der im Jahre 1904 registrierten seismischen Störungen*. Publications du Bureau Central de l'Association Internationale de Sismologie, Série B, Catalogues. Veröffentlichungen des Zentralbureaus der Internationalen Seismologischen Assoziation. Serie B, Kataloge. Strassburg, xii + 145 pp.

Rothé, J.-P. (1981). Fifty years of history of the International Association of Seismology (1901-1951). *Bull. Seismol. Soc. Am.*, **71**, 905-923.

Rudolph, E. (1903a). Die Fernbeben des Jahres 1897. *Beiträge zur Geophysik*, **5**, 1-93.

Rudolph, E. (1903b). Seismometrische Beobachtungen. *Beiträge zur Geophysik*, **5**, 94-169.

Rudolph, E. (1904). Seismometrische Beobachtungen über japanische Fernbeben in den Jahren 1893–1897. *Beiträge zur Geophysik*, **6**, 377-434.

Rudolph, E. (1905). *Katalog der im Jahre 1903 bekannt gewordenen Erdbeben. Beiträge zur Geophysik*, ***Ergänzungsband III***. Verlag Wilhelm Engelmann, Leipzig, xvii + 674 pp.

Rudolph, E. (1907). Ostasiatischer Erdbebenkatalog. *Beiträge zur Geophysik*, **8**, 114-218.

Scheu, E. (1911a). *Catalogue général des tremblements de terre, ressentis par l'homme et registres par des instruments pendant l'année 1906*. Publications du Bureau Central de l'Association Internationale de Sismologie, Série B, Catalogues, Strasbourg, 45 pp.

Scheu, E. (1911b). *Catalogue régional des tremblements de terre ressentis pendant l'année 1906*. Publications du Bureau Central de l'Association Internationale de Sismologie, Série B, Catalogues, Strasbourg, 112 pp.

Scheu, E. (1917). *Catalogue régional des tremblements de terre ressentis pendant l'année 1908*. Publications du Bureau Central de l'Association Internationale de Sismologie, Série B, Catalogues, Strasbourg, 194 pp.

Scheu, E., and R. Lais (1912). *Catalogue régional des tremblements de terre ressentis pendant l'année 1907*. Publications du Bureau Central de l'Association Internationale de Sismologie, Série B, Catalogues, Strasbourg, 123 pp.

Shide Circular: See British Association for the Advancement of Science.

Sieberg, A. (1904). *Handbuch der Erdbebenkunde.* Vieweg Verlag, Braunschweig, xvii + 360 pp.

Sieberg, A. (1917). *Catalogue général des tremblements 1908*. Publications du Bureau Central de l'Association Internationale de Sismologie, Série B, Catalogues, Strasbourg, 69 pp.

Szirtes, S. (1908). *Coordonnées des stations sismiques du globe et tableaux auxiliaires pour les calculs sismiques*. Publications du Bureau Central de l'Association Internationale de Sismologie, Série A, Mémoires. Veröffentlichungen des Zentralbureaus der Internationalen Seismologischen Assoziation. Serie A, Abhandlungen. Strassburg, 23 pp.

Szirtes, S. (1909a). *Katalog der im Jahre 1905 registrierten seismischen Störungen I. Teil*. Publications du Bureau Central de l'Association Internationale de Sismologie, Série B, Catalogues. Veröffentlichungen des Zentralbureaus der Internationalen Seismologischen Assoziation. Serie B, Kataloge. Strassburg, iv + 193 pp.

Szirtes, S. (1909b). *Katalog der im Jahre 1905 registrierten seismischen Störungen II. Teil*. Publications du Bureau Central de l'Association Internationale de Sismologie, Série B, Catalogues. Veröffentlichungen des Zentralbureaus der Internationalen Seismologischen Assoziation. Serie B, Kataloge. Strassburg, vii + 68 pp.

Szirtes, S. (1910a). *Katalog der im Jahre 1906 registrierten seismischen Störungen, I. Teil, Die schwächeren und weniger ausgeprägten Störungen (III B)*. Publications du Bureau Central de l'Association Internationale de Sismologie, Série B, Catalogues. Veröffentlichungen des Zentralbureaus der Internationalen Seismologischen Assoziation. Serie B, Kataloge. Strassburg, iv + 110 pp.

Szirtes, S. (1910b). *Katalog der im Jahre 1906 registrierten seismischen Störungen, II. Teil, Die grossen und gut ausgeprägten Störungen (III B)*. Publications du Bureau Central de l'Association Internationale de Sismologie, Série B, Catalogues. Veröffentlichungen des Zentralbureaus der Internationalen Seismologischen Assoziation. Serie B, Kataloge. Strassburg, viii + 86 pp.

Szirtes, S. (1912a). *Katalog der im Jahre 1907 registrierten seismischen Störungen*. Publications du Bureau Central de l'Association Internationale de Sismologie, Série B, Catalogues. Veröffentlichungen des Zentralbureaus der Internationalen Seismologischen Assoziation. Serie B, Kataloge. Strassburg, x + 120 pp.

Szirtes, S. (1912b). *Registrierungen der besser ausgeprägten seismischen Störungen des Jahres 1907, Ergänzung zum seismischen Katalog*. Publications du Bureau Central de l'Association Internationale de Sismologie, Série B, Catalogues. Veröffentlichungen des Zentralbureaus der Internationalen Seismologischen Assoziation. Serie B, Kataloge. Strassburg, v + 111 pp.

Szirtes, S. (1912c). Geographische Koordinaten der seismischen Stationen nebst Hilfstabellen. *Gerlands Beiträge zur Geophysik,* **11**, Kleine Mitteilungen, 177-199.

Szirtes, S. (1913a). *Katalog der im Jahre 1908 registrierten seismischen Störungen*. Publications du Bureau Central de l'Association Internationale de Sismologie, Série B, Catalogues. Veröffentlichungen des Zentralbureaus der Internationalen Seismologischen Assoziation. Serie B, Kataloge. Strassburg, viii + 133 pp.

Szirtes, S. (1913b). *Registrierungen der besser ausgeprägten seismischen Störungen des Jahres 1908, Ergänzung zum seismischen Katalog*. Publications du Bureau Central de l'Association Internationale de Sismologie, Série B, Catalogues. Veröffentlichungen des Zentralbureaus der Internationalen Seismologischen Assoziation. Serie B, Kataloge. Strassburg.

Tams, E. (1950). Materialien zur Geschichte der deutschen Erdbebenforschung bis zur Wende des 19. zum 20. Jahrhundert Teil II und Teil III. *Mitteilungen des Deutschen Erdbebendienstes*, **Sonderheft 2**, Akademie Verlag, Berlin 1950, 169 pp.

U.S. Weather Bureau (US-WB). Monthly Weather Review. [Note: A monthly issue of mostly meteorological data. A "Seismology Section" began in the December 1914 issue, and from 1915 through 1924 contained the non-instrumental and instrumental observations by stations in the United States (including Hawaii, Puerto Rico, and Panama Canal Zone) and Canada for the years 1914–1920.]

Weigand, B. (1902). Ausbreitung der mikroseismischen Beobachtungen. In: *Verhandlungen der vom 11. bis 13. April 1901 zu Straßburg abgehaltenen Ersten Internationalen Seismologischen Konferenz.* (Rudolph, E. Ed.). *Beiträge zur Geophysik*, **Ergänzungsband I**, Wilhelm Engelmann, Leipzig, 1902, viii + 439 pp., 183-188.

Wiechert, E. (1899). Seismometrische Beobachtungen im Göttinger Geophysikalischen Institut. *Nachrichten von der Königl. Gesellschaft der Wissenschaften zu Göttingen, Mathematisch-physikalische Klasse*, 195-208.

Willemann, R.J., and D.A. Storchak (2001). Data collection at the International Seismological Centre. *Seismol. Res. Lett.*, **72**, 440-461.

Appendix Notes for Table 1

The following Notes contain references for the listed seismic stations in Table 1, as far as the bulletins as originals or as copies could be checked or additional bibliographic references could be found. The Notes are numbered, corresponding to the numbers shown in Table 1. References in *italics* mean that this bulletin or publication is located somewhere but that we have no copy

in our collection. One may deduce from volume numbers and bulletin titles that additional material may also have existed. However, if we have not seen originals or any type of citation, we have not made such conclusions and have omitted such entries.

The phrase *BGS* means that these bulletins can be found in the National Seismological Archive of the British Geological Service (Henni *et al.*, 1999; Lovell and Henni, 1999; Henni *et al.*, 2000); the phrase *in Hamburg* means that these bulletins were located in the collection of the seismological station of the University in Hamburg, Germany; the phrase *at ISC* means that these bulletins were located in the collection at the International Seismological Centre in Thatcham, England; the phrase *at KNMI* means that these bulletins were located in the library of the KNMI (Royal Netherlands Meteorological Institute) in De Bilt, The Netherlands; and the phrase *NOAA* means that these bulletins were listed in the report of the microfilm project of Herrmann *et al.* (1983). [Note: After the microfilming, the NOAA collection was sent to the US Geological Survey, Menlo Park. However, only a small fraction of this collection was saved by W.H.K. Lee at his home at present.]

The bulletins of the ISA (1904–1908) contain reference lists, and the BAASSC contains listings of contributing stations for the time period 1913–1915. Such references were used as information that a station bulletin for specific time periods existed. However, these references were only given here when no other (complete) bulletin information was available.

We cannot exclude the possibility that, for some stations, the different references given for the same time period will later show up again because the quality and style of found citations changed with time. This list of references reflects the international nature of seismology; we found bulletins published in numerous different languages. Although we tried to cite as accurately as possible, we are sure that we copied errors from old citation lists and may also have added new errors. This will be true in particular for page numbers, spelling errors, and missing accents in languages unknown to the authors. However, we also have examples in which today's spelling is different from that of 100 years ago.

1. Alger (Algiers, Bousareah)

   Since 1910 included in "Annales du Bureau . . . " of France, see 55.
   1911–1919 included in "Bulletin mensuel du . . . " of France, see 55.
   03.1919–12.1920 included in Rothé (1920, 1922), see 60.

2. Discovery

   Bernacchi, L.C., and J. Milne (1908). Earthquakes and other earth movements recorded in the Antarctic regions, 1902–1903. In "National Antarctic Expedition 1901–1904. Physical Observations." Royal Society, London, 1908, 37-96.

3. Chacaritos (Chacarita, Buenos Aires, Buenos Ayres)

   At ISC: 08.–09.1906.
   Shide Circular **20**, 325-326 (1908-07-06–1908-12-28).

4. Córdoba

   Shide Circular **2**, 48-57 (1899-03-06–1900-06-21); **6**, 172-181 (1900-06-26–1901-12-21); **8**, 259-266 (1902-01-07–1903-06-30); **10**, 315-318 (1903-07-01–1903-12-28); **14**, 85-86 (1904-07-01–1905-01-19); **17**, 209-210 (1904-01-03–1904-06-30).

5. La Plata

   Negri, G. (1909). Organización del servicio sísmico y sus primeros resultados (Noviembre de 1907 á Diciembre de 1908). Obs. Astr. de la Universidad Nacional de La Plata. N. S. ***2****, 54 pp.*
   NOAA: 1907–1920.

6. Pilar-Córdoba

   Shide Circular **14**, 86-88 (1905-03-02–1905-12-29); **15**, 128-134 (1906-01-02–1906-12-25); **17**, 210-211 (1907-01-02–1907-06-26); **20**, 327-331 (1908-01-06–1909-06-29). Used in the BAASSC (1913–1917) 1913–1914.

7. Southern Andes (Mendoza)

   Loos, P.A. (1907). Estudios de seismología. Los movimientos seísmicos en Mendoza. Anales del Ministerio de Agricultura ***3****, 38 pp.*
   Loos, P.A. (1908). Informe sobre los movimientos seísmicos observados en las provincias de Mendoza y San Juan, durante el mes de marzo de 1908. B. del Ministerio de Agricultura ***9****, 237-243.*
   Loos, P.A. (1910). Meteorología y Seismologia. La Viticultura Argentina ***1****, 43-50. Boletín de la Sociedad Sismológica Sud-Andina: publicado bajo la Protección de los Gobiernos de San Juan y de Mendoza 1912.*

8. Adelaide

   Shide Circular **23**, 41-44 (1909-01-01–1909-06-29); **25**, 157-158 (1911-07-03–1911-12-31); **26**, 222-225 (1910-07-03–1911-06-28); **26**, 225-226 (1912-01-01–1912-06-14); **27**, 276-277 (1912-07-07–1912-12-28).
   Used in the BAASSC (1913–1917) 1913–1915.

9. Cocos, Keeling Islands

   Shide Circular **24**, 91 (1911-01-01–1911-06-15); **25**, 155-156 (1911-07-12–1911-12-31).
   Used in the BAASSC (1913–1917) 1913–1914.

10. Perth

    Shide Circular **5**, 140 (1901-10-08–1901-12-31); **6**, 167 (1902-01-01–1902-06-30); **7**, 216-217 (1902-07-02–1902-12-25);

8, 247-248 (1903-01-02–1903-06-09); **9**, 290 (1903-08-12–1903-12-31); **10**, 311 (1904-01-17–1904-06-27); **11**, 343-344 (1904-07-04–1904-12-23); **12**, 21-23 (1905-01-08–1905-06-30); **13**, 56-58 (1905-07-01–1905-12-21); **14**, 95-97 (1906-01-03–1906-06-28); **15**, 147-151 (1906-07-02–1906-12-26); **16**, 177 (1907-01-01–1907-06-27); **17**, 218-219 (1907-07-09–1907-12-25); **18**, 248-249 (1908-01-04–1908-05-20); **19**, 283-284 (1908-07-03–1908-12-30); **20**, 333-334 (1909-01-03–1909-06-28); **22**, 412-413 (1909-07-04–1909-12-23); **22**, 413 (1910-01-30–1910-06-29); **23**, 44 (1910-07-07–1910-12-30); **24**, 95 (1910-03-11–1910-06-29); **24**, 95 (1911-01-02–1911-06-28); **25**, 156-157 (1911-07-04–1911-12-31).

06. + 12.1903 used in Strasbourg's "Von den Instrumenten . . . " and "Verzeichnis der im . . . ," see 60.

Used in the BAASSC (1913–1917) 1913–1915.

*The Perth Observatory Bulletin **1**, 1913, Perth Observatory.*

11. Riverview

Riverview College Observatory (Sydney), New South Wales: Seismological Bulletin (monthly): 03.1909–12.1910, 01.1912–06.1912, 01.1913–03.1916, *04.1916–06.1916, 01.1917, 05.1917–06.1917*, 07.1917–03.1918, *04.1918–06.1918*, 07.1918–11.1918, 12.1918, 01.1919–04.1919, *01.1920–03.1920*, 04.1920–12.1920 (in italics: at ISC).

Used in the BAASSC (1913–1917) 1913–1915.

BGS: 1909–1920.

NOAA: 01.–12.1920.

12. Sydney

Shide Circular **16**, 178-182 (1906-07-23–1907-06-27); **17**, 219-220 (1907-07-01–1907-12-30); **18**, 249 (1908-01-11–1908-06-19); **19**, 284 (1906-08-16–1906-08- 22); **19**, 285 (1908-06-30–1908-12-31); **20**, 334-335 (1909-01-03–1909-06-27); **21**, 372-373 (1909-07-05–1909-12-28); **22**, 414-415 (1910-01-01–1910-06-30); **24**, 96-98 (1910-07-03–1911-06-28); **25**, 158-160 (1911-07-03–1911-12-03); **26**, 226-227 (1912-02-16–1912-06-18); **27**, 277-278 (1912-07-07–1912-12-16).

In Hamburg: Seismic Bulletins 1910–1920.

Used in the BAASSC (1913–1917) 1913–1915.

13. Austria

*Mojsisovics, Edmund v. (1897). Bericht über die Organisation der Erdbeben-Beobachtung nebst Mittheilungen über während des Jahres 1896 erfolgte Erdbeben. Mittheilungen der Erdbeben-Commission der kaiserlichen Akademie der Wissenschaften in Wien **I**. In: Sitz. Ber. der kaiserlichen Akademie der Wissenschaften in Wien **106**, mathematisch-naturwissenschaftliche Classe, Abth. 1, Heft II.*

*Mojsisovics, Edmund v. (1898–1900). Allgemeiner Bericht und Chronik der im Jahre 1897 innerhalb des Beobachtungsgebietes erfolgten Erdbeben, Mittheilungen der Erdbeben-Commission der kaiserlichen Akademie der Wissenschaften in Wien **V**. Ibid., **107**, Heft V; Ibid. Jahre 1898, **X**., **108**, Heft IV; Ibid. Jahre 1899, **XVIII**., **109**, Heft III.*

*Mojsisovics, Edmund v. (1901–1904). Allgemeiner Bericht und Chronik der im Jahre 1900 im Beobachtungsgebiete eingetretenen Erdbeben. Mitteilungen der Erdbeben-Kommission der kaiserlichen Akademie der Wissenschaften in Wien, Neue Folge **II**; Ibid., Jahre 1901, Neue Folge **X**;. Ibid. Jahre 1902, Neue Folge **XIX**; Ibid. Jahre 1903, Neue Folge **XXV**.*

*In Hamburg: Allgemeiner Bericht und Chronik der im Jahre 1904 in Österreich beobachteten Erdbeben. K. K. Zentralanstalt für Meteorologie Geodynamik in Wien, Offizielle Publikation No. **1**, Wien 1906, 7 + 155 pp; Ibid. Jahre 1905, No. **2**, Wien 1907, 6 + 219 pp; Ibid. Jahre 1906, No. **3**, Wien 1908, 6 + 199 pp; Ibid. Jahre 1907, No. **4**, Wien 1909, 10 + 209 pp; Ibid. Jahre 1908, No. **5**, Wien 1910, 6 + 281 pp; Ibid. Jahre 1909, No. **6**, Wien 1911, 7 + 188 pp; Ibid. Jahre 1910, No. **7**, Wien 1912, 6 + 162 pp; Ibid. Jahre 1911, No. **8**, Wien 1914, 6 + 153 pp; Ibid. Jahre 1912, No. **9** + **10**, Wien 1915, 5 + 179 pp; Ibid. Jahre 1914, No. **11**, Wien 1917, 6 + 130 pp; Ibid. Jahre 1915, No. **12**, Wien 1919, 9 + 135 pp; Ibid. Jahren 1916–1921, No. **13**, Wien 1922, 40 pp.*

*In Hamburg: Conrad, Viktor. Die zeitliche Verteilung der in den Österreichischen Alpen- und Karstländern gefühlten Erdbeben in den Jahren 1897 bis 1907. Mitteilungen der Erdbeben-Kommission der kaiserlichen Akademie der Wissenschaften in Wien, Neue Folge **XXXVI**.*

*In Hamburg: Conrad, Viktor. Die zeitliche Verteilung der in den Jahren, 1897 bis 1907 in den Österreichischen Alpen- und Karstländern gefühlten Erdbeben (ein Beitrag zum Studium der sekundär auslösenden Ursachen der Erdbeben, II. Mitteilung). Ibid., Neue Folge **XLIV**.*

14. Graz

*Benndorf, H. (1908). Die Erdbebenstation am physikalischen Institut der Universität Graz. Mitteilungen des Naturwissenschaftlichen Vereines für Steiermark **44**, 234–*

Rožič, J., and N. Stücker (1909). Erster Bericht über seismische Registrierungen in Graz im Jahre 1907. Ibid., **45**, 237-256.

Rožič, J. (1910). Zweiter Bericht über seismische Registrierungen in Graz im Jahre 1908. *Ibid*., **46**, 362-381.

Stücker, N., and A. Fritsch (1911). Dritter Bericht über seismische Registrierungen in Graz im Jahre 1909. *Ibid*., **47**, 219-241.

Stücker, N. (1911). Vierter Bericht über seismische Registrierungen in Graz im Jahre 1910. *Ibid*., **47**, 242-267.

Stücker, N. (1912). Fünfter Bericht über seismische Registrierungen in Graz im Jahre 1911. *Ibid*., **48**, 248-273.

Stücker, N. (1912). Die mikroseismische Bewegung in Graz in den Jahren 1907–1911. *Ibid*., **48**, 274-281.

Stücker, N. (1913). Sechster Bericht über seismische Registrierungen in Graz im Jahre 1912. *Ibid*., **49**, 237-263.

Stücker, N. (1913). Die mikroseismische Bewegung in Graz im Jahre 1912. *Ibid*., **49**, 264-266.

Stücker, N. (1914). Siebenter Bericht über seismische Registrierungen und die mikroseismische Bewegung in Graz im Jahre 1913. *Ibid*., **50**, 1-33.

Stücker, N. (1915). Achter Bericht über seismische Registrierungen und die mikroseismische Bewegung in Graz im Jahre 1914. *Ibid*., **51**, 1-23.

Stücker, N. (1916). Neunter Bericht über seismische Registrierungen und die mikroseismische Bewegung in Graz im Jahre 1915. *Ibid*., **52**, 35-91.

Stücker, N. (1917). Zehnter Bericht über seismische Registrierungen und die mikroseismische Bewegung in Graz im Jahre 1916. *Ibid*., **53**, 263-309.

Stücker, N. (1918). Elfter Bericht über seismische Registrierungen und die mikroseismische Bewegung in Graz im Jahre 1917. *Ibid.*, **54**, 301-342.

Zwölfter Bericht über seismische Registrierungen in Graz [1918].

Dreizehnter Bericht über seismische Registrierungen in Graz [1919].

Wöchentlicher Erdbebenbericht, 1911–07.1914.

15. Innsbruck

Seismische Aufzeichnungen Innsbruck, Institut für Kosmische Physik, 01.–09., 11.–52.1913, 01.–26.1914.

At ISC: 01.1913–06.1914, 08.1914–05.1915, 08.–12.1915.

Used in the BAASSC (1913–1917) 1913–1914.

16. Judenburg

BGS: 1916.

17. Kremsmünster

Schwab, P. Franz (1900). Bericht über Erdbebenbeobachtungen in Kremsmünster. Mittheilungen der Erdbeben-Commission der kaiserlichen Akademie der Wissenschaften in Wien **XV**. In: Sitz. Ber. der kaiserlichen Akademie der Wissenschaften in Wien **109**, mathematisch-naturwissenschaftliche Klasse, Abth. 1, Heft II, 51 pp.

*In Hamburg: Schwab, P. Franz. Bericht über die Erdbebenbeobachtungen in Kremsmünster im Jahre 1900. Mitteilungen der Erdbeben-Kommission, Neue Folge **IV**.*

*In Hamburg: Schwab, P. Franz. Ibid., Jahre 1901, Neue Folge **XII**.*

Schwab, P. Franz (1903). Bericht über die Erdbebenbeobachtungen in Kremsmünster im Jahre 1902. *Ibid.*, Neue Folge **XXI**, 23 pp.

*In Hamburg: Schwab, P. Franz. Ibid., Jahre 1903, Neue Folge **XXVI**.*

At KNMI: Schwab, Fr. (1908). Erdbeben-Beobachtungen in Kremsmünster. Jahresbericht des Vereinsmuseums Fransico-Carolinum. Linz 1908, 33 pp. [1904–1907].

At KNMI: Schwab, Fr. (1909). Beilage zu den Erdbeben-Beobachtungen in Kremsmünster 1904–1907. Ibid., Linz 1909, 6 pp. [1908].

Used in the BAASSC (1913–1917) 1913–1914.

BGS: 1906–1907.

18. Wien (Vienna)

*In Hamburg: Conrad, Viktor. Beschreibung des seismischen Observatoriums der k. k. Zentralanstalt für Meteorologie und Geodynamik in Wien. Mitteilungen der Erdbeben-Kommission der kaiserlichen Akademie der Wissenschaften in Wien, Neue Folge **XXXIII**, 28 pp.*

In Hamburg: Monatliche Mitteilungen der k. k. Zentralanstalt für Meteorologie und Geodynamik. Wien 1905.

Wöchentliche Erdbebenberichte, 01.1906–52.1906; 01.1906–52.1907; 01.1906–52.1908.

*In Hamburg: Conrad, Viktor. Seismische Registrierungen in Wien, k. k. Zentralastalt für Meteorologie und Geodynamik, im Jahre 1909 (mit einigen Hilfstabellen zur Analyse von Bebendiagrammen). Mitteilungen der Erdbeben-Kommission der kaiserlichen Akademie der Wissenschaften in Wien, Neue Folge **XXXIX**.*

Schneider, Rudolf. Seismische Registrierungen in Wien, k. k. Zentralanstalt für Meteorologie und Geodynamik, im Jahre 1910. *Ibid.*, Neue Folge **XLI**, 49 pp.; *Ibid.*, Jahre 1911, Neue Folge **XLV**, 55 pp.; *Ibid.,* 1912, Neue Folge **XLVII**.

Wien, Zentralanstalt für Meteorologie und Geodynamik, Seismische Aufzeichnungen, 1913–1920 (handwritten or typed lists).

NOAA: yearly reports 1912, 1913.

19. Baku (Bakou, Baky)

Included in: Seismische Monatsberichte des Physikalischen Observatoriums zu Tiflis, 10.1906–12.1907, see 64.

Bulletin of Imperial Russia 1907–1908, see 168.

Renholm, Edwin (1913). Seismometrische Beobachtungen in Baku und Balachany in der Zeit vom 1. Januar bis 31. Dezember 1910.

Wöchentliches Bulletin der Nobel'schen Seismischen Station Baku: 1–3, 6–17, 19–52, 1913; 1–8, 10–22, 1914.

In Hamburg: Seismometrische Beobachtungen in Baku und Balachany, 1908, 1910.

In Hamburg: Erdbebenberichte Baku, 1912–1914.

At ISC: 04.1912–11.1914.

Monthly seismological bulletin of Baku seismological station 1912–1916.

Used in the BAASSC (1913–1917) 1913–1915.

20. Balachany (Balakhan, Balakhany)

Included in: Seismische Monatsberichte des Physikalischen Observatoriums zu Tiflis, 1902–12.1909, see 64.

Monthly bulletin of Tiflis seismological station 1910–1916, see 64.

Bulletin of Imperial Russia 1907–1908, see 168.

Renholm, Edwin (1913). Seismometrische Beobachtungen in Baku und Balachany in der Zeit vom 1. Januar bis 31. Dezember 1910.

In Hamburg: Seismometrische Beobachtungen in Baku und Balachany, 11.1908–1910.

21. Šemakha (Chemakha, Shemakha)

Included in: Seismische Monatsberichte des Physikalischen Observatoriums zu Tiflis, 01.1903–09.1909, see 64.

Bulletin of Imperial Russia 1904–1908, see 168.

22. Zurnabad (Zournabath, Zuraband)

10.1908–10.1909, see 64.

Bulletin of Imperial Russia 1912, see 168.

23. D'Uccle

Bulletin Mensuel de la Station Géophysique d'Uccle (Station Ernest Solvay) (1901) Mai 1901, 3 pp.; (1901) Juin 1901, 3 pp.; (1901) Juillet 1901, 2 pp.; (1901) Août 1901, 3 pp.;

(1901) Septembre–Octobre 1901, 3 pp.; (1902) Novembre 1901–Juin 1902, 14 pp.; (1903) Avril a Décembre 1902, 19 pp.; (1904) Janvier a Mars 1903, 15 pp.; (1904) Avril a Décembre 1903, 19 pp.

Observations Séismologique faites a Uccle (1906–1910). Annales de l'Observatoire Royal de Belgique en 1904 et 1905, Nouvelle Sérié, Physique du Globe **3**, 393-398; *Ibid.,* en 1906, **3**, 399-421; *Ibid.,* en 1907, **4**, 122-138; *Ibid.,* en 1908, **4**, 258-264; *Ibid.,* en 1909, **5**, 98-108.

Observations Séismologique faites a Uccle (1911–1914). Annales de l'Observatoire Royal de Belgique en 1910, 181-194; *Ibid.,* en 1911, 195-216; en 1912, 217-266; en 1913, 267-321.

Bulletin Sismique de l'Observatoire Royal Belgique, 1914–1920.

In Hamburg: Annales de l'Observatoire Royal de Belgique. Nouvelle Sérié, Physique du Globe, 1914–1918.

01.–12.1916 published in BAASSC (1916) as supplement to "Large Earthquakes of 1916."

24. La Paz

Boletín de la Estación Sismológica del Colegio de San Calixto (PP. Jesuitas), La Paz (Bolivia). Single leaves, 05.–11.1913.

In Hamburg: Bulletin 1913–1920.

Boletín mensual del Observatorio Meteorológico y Sísmico del Colegio de San Calixto, dirigido por PP. de la Compañía de Jesús, 1918. In: Boletín de la Dirección Nacional de Estadística y Estudios Geográficos, República de Bolivia, ***2. Ép. 1 1918****.*

Quadros mensuales del Observatorio Meteorológico y Sísmico del Colegio de San Calixto, dirigido por PP. de la Compañía de Jesús, 1920. Ibid., ***2. Ép. 3 1920****.*

At ISC: 05.1914–04.1917, 06.1917–12.1920.

Used in the BAASSC (1913–1917) 1913–1915.

BGS: 1916–1920.

NOAA: 05.1913–03.1914, 05.1914–12.1920.

25. Bosnia and Herzegovina

In Hamburg: Erdbebenbeobachtungen in Bosnien und der Herzegovina 1896–1912.

Harisch, O. (1907). Zusammenstellung der Ergebnisse der in den Jahren 1904 und 1905 in Bosnien und Herzegovina stattgefundenen Erdbebenbeobachtungen. Ergebnisse der meteorologischen Beobachtungen an der Landesstation in Bosnien und der Hercegovina in den Jahren 1904 und 1905. Sarajevo 1907, pp 81.

Zusammenstellung der Ergebnisse der in Bosnien und Herzegovina stattgefundenen Erdbebenbeobachtungen im Jahre 1906. Sarajevo 1907; Jahre 1907. Sarajevo 1908; Jahre 1908. Sarajevo 1909, pp. 17.

Harisch, O. (1910). Zusammenstellung der im Jahre 1909 in Bosnien und der Herzegovina stattgefundenen Erdbebenbeobachtungen. Ergebnisse der meteorologischen Beobachtungen an der Landesstation in Bosnien und der Hercegovina im Jahre 1909. Sarajevo 1910, pp. 27.

Zusammenstellung der Ergebnisse der im Jahre 1910 in Bosnien und der Herzegovina stattgefundenen Erdbebenbeobachtungen. Ibid., Jahre 1910. Sarajevo 1911, pp. 19.

Harisch, O. (1912). Zusammenstellung der Ergebnisse der im Jahre 1911 in Bosnien und Herzegovina stattgefundenen Erdbebenbeobachtungen. Sarajevo 1912, pp. 23.

26. Sarajevo

At ISC: 01.1906–04.1910, 06.1910–06.1912, 10.1912–12.1913.

Used in the BAASSC (1913–1917) 1913.

NOAA: 1904, 1905, 09.1910–12.1913.

27. Fernando de Noronha

Shide Circular **24**, 83 (1911-03-24–1911-06-25); **25**, 146 (1911-07-03–1911-12-16); **26**, 207-209 (1911-12-21–1912-06-18); **27**, 273-274 (1912-07-16–1912-12-24).

Used in the BAASSC (1913–1917) 1913–1915.

28. Rio de Janeiro

Bolletin Mensal do Observatorio do Rio de Janeiro. Rio de Janeiro 1906, 1907, 1908.

In Hamburg: Boletín Sismológico 1906–1920.

NOAA: 1906–1920.

29. Bulgaria

In Hamburg: Zemletresenjia o Bulgarija: otcet za zabelezenite zemletresenija prez . . . godina (Tremblements de terre en Bulgarie) ***1****(1902)–****21*** *(1920).*

Watzof, Spas: Tremblements de terre en Bulgarie. Nr. ***4*** *Liste des tremblements de terre observés pendant l'année 1903.*

Watzof, Spas (1907–1909). Ibid., Nr. ***7****, 1906, 56 pp.; Ibid., Nr.* ***8****, 1907, 78 pp.; Ibid., Nr.* ***9****, 1908, 95 pp.*

NOAA: 1917–1920.

30. Sofia (Sofija)

Watzof, Spas (1907–1912). Bulletin Sismographique de l'Institut Météorologique Central de Bulgarie Nr. **1**. Enregistrements à Sofia de 16 avril à 31 décembre 1905, 56 pp.; *Ibid.,* Nr. **2**, 1 janvier à 31 décembre 1906, 34 pp.; *Ibid.,* Nr. **3**, 1 janvier à 31 décembre 1907, 43 pp.; *Ibid.,* Nr. **4**, 1 janvier à 30 juin 1908, 24 pp.; *Ibid.,* Nr. **5**, 1 juillet à 31 décembre 1908, 21 pp.; *Ibid.,* Nr. **6**, 1 janvier à 31 décembre 1909, 43 pp.; *Ibid.,* Nr. **7**, 1 janvier 1910 jusquáu 31 décembre 1911, 23 pp.

NOAA: 1917–1920.

31. Manitoba (St. Boniface), Winnipeg

Rousseau, Ferdinand A. (1910, 1911). Jesuit seismological service record of the St. Boniface earthquake station, Canada, November–December 1910; January–June 1911. Monthly Weather Review, 1910, 1911.

Blain, Joseph (1910, 1911, 1912). Jesuit seismological service record of the St. Boniface earthquake station, Manitoba, Canada for February–October, 1910; July–December, 1911; January–April, 1912. Monthly Weather Review 1910, 1911, and 1912.

NOAA: 01.1911–03.1912.

32. Ottawa

Annual Report in Terrestrial Magnetism and Gravity. Report of the Chief Astronomer, Dominion astronomical observatory, Supplement from 1906.
Klotz, O. (1910). Seismology, Terrestrial Magnetism and Gravity. Report of the Chief Astronomer 1909, Supplement No. 1, Ottawa 1910.
Mimeographed monthly bulletins from 01.1910.

33. Toronto

BAASRP **1899**, 170–172 (1897-09-20–1899-06-05).
Shide Circular **2**, 35-37 (1899-06-05–1899-12-31); **3**, 66-69 (1900-01-02–1900-12-25); **4**, 102-103 (1901-01-04–1901-06-24); **5**, 127-129 (1901-07-11–1901-12-31); **6**, 152-153 (1902-01-01–1902-06-11); **7**, 203 (1902-07-05–1902-12-28); **8**, 236-237 (1903-01-04–1903-06-16); **9**, 280 (1903-07-21–1903-12-23); **10**, 305 (1904-01-03–1904-06-27); **11**, 347 (1904-07-10–1904-12-21); **12**, 23 (1905-01-20–1905-06-30); **13**, 40 (1905-07-06–1905-12-18); **14**, 76-77 (1906-01-06–1906-06-30); **16**, 174-175 (1906-07-08–1907-06-22); **17**, 214-215 (1907-07-01–1907-12-30); **18**, 247 (1908-01-11–1908-06-18); **19**, 278 (1908-07-08–1908-12-28); **20**, 323 (1909-01-12–1909-06-27); **21**, 359-360 (1909-07-07–1909-12-09); **22**, 401-402 (1910-01-01–1910-06-29); **23**, 30 (1910-07-03–1910-12-30); **24**, 85 (1911-01-01–1911-06-30); **25**, 147-149 (1911-07-01–1911-12-31); **26**, 210-212 (1912-01-04–1912-06-29); **27**, 274-275 (1912-07-07–1912-12-28).
06. + 12.1903 used in Strasbourg's "Von den Instrumenten . . ." and "Verzeichnis der im . . . ," see 60.
1904 In: *Reid, Harry Fielding. Records of Seismographs. Terrestrial Magnetism and Atmospheric Electricity, 1905.*
Klotz, O. (1909). Seismograph Records. J. R. Astr. Soc. Canada, 152–156.
Results of meteorological, seismological, and magnetical observations, Toronto Observatory, 1911, 1921.
Used in the BAASSC (1913–1917) 1913–1915.
See US-WB, 1914–1920.
BGS: 1907–1920.
At ISC: 01.1910–02.1911, 04.1911–12.1920.
NOAA: 08.1910–01.1916, 03.1916–12.1920.

34. Victoria, British Columbia

BAASRP **1899**, 172-173 (1898-10-11–1899-05-25).
Shide Circular **2**, 38-39 (1899-06-05–1899-12-31); **3**, 70-74 (1900-01-02–1900-12-25); **4**, 103-105 (1901-01-04–1901-06-24); **5**, 129-131 (1901-07-11–1901-12-31); **6**, 153-154 (1902-01-01–1902-06-16); **7**, 204 (1902-07-05–1902-12-31); **8**, 237-238 (1903-01-04–1903-06-25); **9**, 281 (1903-07-12–1903-12-30); **10**, 306 (1904-01-03–1904-06-27); **11**, 348 (1904-07-10–1904-12-21); **12**, 24 (1905-01-10–1905-06-30); **13**, 41 (1905-07-06–1905-12-18); **14**, 77-78 (1906-01-06–1906-06-24); **16**, 176 (1906-07-08–1907-06-13); **17**, 215-216 (1907-07-01–1907-12-30); **18**, 247-248 (1908-01-11–1908-06-18); **19**, 279 (1908-07-08–1908-12-28); **20**, 324 (1909-01-11–1909-06-27); **21**, 360 (1909-07-07–1909-12-09); **22**, 402-403 (1910-01-01–1910-06-29); **23**, 31 (1910-07-03–1910-12-30); **24**, 85-86 (1911-01-01–1911-06-19); **25**, 149-150 (1911-07-01–1911-12-29); **26**, 212-213 (1912-01-04–1912-06-29); **27**, 275-276 (1912-07-07–1912-12-28).
06. + 12.1903 used in Strasbourg's "Von den Instrumenten . . ." and "Verzeichnis der im . . . ," see 60.
1904 In: *Reid, Harry Fielding. Records of Seismographs. Terrestrial Magnetism and Atmospheric Electricity, 1905.*
ISA: 1906.
Used in the BAASSC (1913–1917) 1913–1915.
See US-WB, 1914–1920.

35. St. Vincent (São Vicente)

Shide Circular **23**, 32 (1910-11-15–1910-12-25); **24**, 70 (1911-01-03–1911-06-15); **26**, 206 (1911-07-05–1912-06-10).
Used in the BAASSC (1913–1917) 1913–1914.

36. Copiapó

Included in "Boletín del servicio sismológico de Chile . . . ," see 37.

37. Chile

*In Hamburg: Montessus de Ballore, F. de (1909). Boletín del servicio sismológico de Chile **1**. Años de 1906, 1907, 1908. Santiago di Chile 1909, 200 pp.*
*Montessus de Ballore, F. de (1910). Boletín del servicio sismológico de Chile **2**. Primer Semestre de 1909. Anales de la Universidad **125**, Santiago di Chile 1910, 819-918.*
In Hamburg: 1912–1917.

38. Santiago de Chile

Included in "Boletín del servicio sismológico de Chile . . . ," see 37.
BGS: 1910–1913.
NOAA: 1919–1920.

39. Taihoku (Formosa/Taiwan)

Taihoku Meteorological Observatory was established in 1896. A Gray-Milne seismograph was installed in 1897, and an Omori seismograph in 1903. Auxiliary stations in Taiwan equipped with Gray-Milne seismographs include Tainan (1898), Taitung (1903), Taichung (1903), and Penghu (1898).
Omori, F. (1905). [Note: This report contains many seismic readings from stations in Taiwan (Formosa) from about 1897 to the end of 1904.]
1904 used in Rudolph (1907).
02.–03.1904 used in Strasbourg's "Verzeichnis der im . . . ," see 60.
Cheng, S.N., C.C. Chang, C.F. Wu, Y.T. Yeh, and T.C. Shin (1997). Compilation of Earthquake Data in Taiwan during the Period of Japanese Occupation (I) and (II). Report IESCR97-003 amd IESCR97-004, Institute of Earth Science of the Academia Sinica and Central Weather Bureau, Taipei, Taiwan, 1352 pp. [Note: These two reports contain many seismic readings from stations in Taiwan from 1904 to 1943.]

40. Tsingtau (Qingdao), Kiautschou (Jia zhou)

Seismische Registrierungen des Kaiserlichen Observatoriums in Tsingtau, Heft I. Januar 1909 bis 1. April 1910.

In Hamburg: Seismische Registrierungen in Tsingtau 1911–1913.
NOAA: 1911–1913.
Used in the BAASSC (1913–1917) 1913.

41. Zi-Ka-Wei (Hsu-chia-hui)

Bulletin sismologique de Zi-ka-wei pour l'année 1900–1903.
*Observatoire Magnétique Météorologique et Sismologique de Zi-Ka-Wei. Bulletin des observ. sismologique **31**, Année 1905, Fascicule C Sismologie. Chang-Hai 1908, 29 pp.*
Bulletin sismologique de Zi-ka-wei pour l'année 1906 et tableaux résumés des années 1904, 1905 et 1906. Bulletin des Observations **33**, Année 1907, Fascicule C Sismologie. Observatoire Magnétique Météorologique et Sismologique de Zi-Ka-Wei (Chine), Chang-Hai 1912.
Bulletin des Observations **34**, Année 1908, Fascicule C Sismologie. Observatoire Magnétique Météorologique et Sismologique de Zi-Ka-Wei (Chine), Chang-Hai 1912.
*Bulletin des Observations **35**, Année 1909, ibid.*
Bulletin des Observations **36**, Année 1910, *ibid.,*1914.
Zi-Ka-Wei (Chine) Bulletin Sismique de l'Observatoire de Zi-Ka-Wei, prés Chang-hai, Chine. Single leafs 01.1906–12.1920.
1904 used in Rudolph (1907).
03.1904 used in Strasbourg's "Verzeichnis der im . . . ," see 60.
At ISC: 07.1909–11.1919, 01.–06.1920.
Used in the BAASSC (1913–1917) 1913–1915.

42. San José

*Boletín del Instituto Físico-Geográfico de Costa Rica (San José) **1**(1901)–**3**(1903).*

43. Croatia and Slavonia

Bulletin Hebdomadaire des Observatoires sismiques de la Hongrie et la Croatie, Avril 1909, No. 16-18.
See also 46.

44. Pula (Pola)

Veröffentlichung des Hydrographischen Amtes der Kaiserlichen und Königlichen Kriegsmarine in Pola, Gruppe 2, Jahrbuch der meteorologischen, erdmagnetischen und seismischen Beobachtungen, N.F. 1896–1899.
In Hamburg: Jahrbuch der meteorologischen, erdmagnetischen und seismometrischen Beobachtungen in Pola, 1900.
Jahrbuch der meteorologischen, erdmagnetischen und seismometrischen Beobachtungen in Pola, 1901. *Ibid.,* 1902. *Ibid.,* 1903.
Kesslitz, W. (1905). Jahrbuch der meteorologischen, erdmagnetischen und seismometrischen Beobachtungen in Pola. Neue Folge **9**.
Kesslitz, W. (1907). *Ibid.,* 1906.
Kesslitz, W. (1908). *Ibid.,* Neue Folge **12,** Beobachtunge des Jahres 1907. Veröffentlichung des Hydrographischen Amtes der Kaiserlichen und Königlichen Kriegsmarine in Pola.
Kesslitz, W. (1909). *Ibid.,* Neue Folge **13**, Beobachtunge des Jahres 1908.
Jahrbuch der meteorologischen, erdmagnetischen und seismometrischen Beobachtungen in Pola, 1909. *Ibid.,* 1910. *Ibid.,* 1911. *Ibid.,* 1912.*Ibid.,* 1913. *Ibid.,* 1914. *Ibid.,* 1915.
In Hamburg: Jahrbuch der meteorologischen, erdmagnetischen und seismometrischen Beobachtungen in Pola, 1916. Ibid., 1917.
Seismische Aufzeichnungen (handwritten), 1910–1914.
At ISC: 01.1907–12.1917.
NOAA: 1901, 1904–1915, 1918.

45. Rijeka (Fiume)

1906–1912 in Kövesligethy (1907, 1909, 1913), see 86.

46. Zagreb (Agram)

*Kišpatić, M. (1904). Dvadeset i prvo Potresno Izvješće za godinu 1903 (21. Erdbebenbericht für das Jahr 1903). Südslawische Akademie der Wissenschaften und Künste **158**, Agram 1904.*
Godišnje Izvješče Zagrbačkog Meteorološkog Opservatorija za Godinu 1906 (Jahrbuch des Meteorologischen Observatoriums in Zagreb (Agram) für das Jahr 1906), Dio IV, Potresi u Hrvatskoj i Slavonij god. 1906, IV. Teil, Erdbeben in Kroatien und Slavonien im Jahre 1906. Ibid., 1907.
Mohorovičić, A. (1910). Godišnje Izvješče Zagrbačkog Meteorološkog Opservatorija za Godinu 1908 (Jahrbuch des Meteorologischen Observatoriums in Zagreb (Agram) für das Jahr 1908), Dio IV, Potresi u Hrvatskoj i Slavonij god. 1908, IV. Teil Erdbeben in Kroatien und Slavonien im Jahre 1908, 55 pp.
Godišnje Izvješče Zagrbačkog Meteorološkog Opservatorija za Godinu 1909. Ibid., im Jahre 1909.
1906–1909 in Kövesligethy (1907, 1909), see 86.
In Hamburg: Zagreb, 1906–1920.
Seismische Aufzeichnungen: weekly lists 01.1913–No. 21, 1914.
01.–12.1916 published in BAASSC (1916) as supplement to "Large Earthquakes of 1916."
NOAA: 1913–07.1914, 08.1918–12.1918.
At ISC: 01.1913–08.1914, 08.–12.1918, 1502–1938 (?).
Used in the BAASSC (1913–1917) 1914.

47. Cheb (Eger)

*Uhlig, V. Bericht über die seismischen Ereignisse des Jahres 1900 in den deutschen Gebieten Böhmens. Mitteilungen der Erdbeben-Kommission, Neue Folge **III**.*
Irgang, Georg (1908/09). Jahresbericht der k. k. Staats-Oberrealschule in Eger 1908/09.
Irgang, Georg (1911/12). Seismische Registrierungen der Erdbebenwarte in Eger vom 20. November 1908 bis 31. Dezember 1911. Jahresbericht der k. k. Staats-Oberrealschule in Eger 1911/12.
Irgang, Georg (1912). Seismische Registrierungen in Eger vom 20. Nov. 1908 bis 31. Dez. 1911. Wiener Anzeiger 1912, 195-198.

Irgang, Georg (1912/13). Seismische Registrierungen der Erdbebenwarte in Eger im Jahre 1912. Jahresbericht der k. k. Staats-Oberrealschule in Eger 1912/13, 1-12.

Irgang, Georg (1913/14). Seismische Registrierungen der Erdbebenwarte in Eger vom 1. Januar 1913 bis 30. April 1914. *Ibid.,* 1913/14, 29-50.

Irgang, Georg (1927). Bericht über die seismischen Registrierungen der Erdbebenwarte in Eger in der Zeit vom 1. Mai 1914 bis Juli 1919. Státní Ústav pro Geofysiku 1927, 1-6.

Bulletin of the Seismological Station Cheb May 1914–June 1919, handwritten station book, 36 pp.

48. Disko (Godhavn)

Harboe, E.G. (1912). Das Erdbebenobservatorium auf der Disko-Insel. G. Gerlands Beiträge zur Geophysik **11**, Kleine Mitteilungen, 9-28.

Harboe, E.G. (1915–1918). Gerlands Beiträge zur Geophysik **14**, Kleine Mitteilungen, 24-31.

49. Quito

ISA: 1904, 1906.

50. Helwan (Hulwān, Abbasia, Abbassieh, Cairo)

Shide Circular **1**, 15 (1899-10-06–1899-11-21); **2**, 40-42 (1900-01-05–1900-06-22); **3**, 75-76 (1900-07-20–1900-12-27); **4**, 106 (1901-01-04–1901-06-15); **5**, 132 (1901-09-08–1901-12-24); **6**, 156 (1902-01-07–1902-06-20); **7**, 205-206 (1902-07-05–1902-12-16); **8**, 239 (1903-01-04–1903-06-04); **10**, 313-315 (1903-07-01–1904-07-27); **11**, 335 (1904-08-11–1904-12-20); **12**, 17 (1905-01-13–1905-06-30); **13**, 47-48 (1905-07-09–1905-12-26); **14**, 84 (1906-01-21–1906-06-24); **15**, 127 (1906-07-14–1906-12-27); **16**, 173 (1907-01-01–1907-02-24); **17**, 205-208 (1907-05-07–1907-12-30); **18**, 234-236 (1908-01-02–1908-06-28); **19**, 267-269 (1908-06-30–1908-12-28); **20**, 313-315 (1909-01-02–1909-06-29); **21**, 363-365 (1909-07-01–1909-12-28); **22**, 404-407 (1910-01-01–1910-06-30); **24**, 75-80 (1910-07-07–1911-06-30); **25**, 138-144 (1911-07-01–1911-12-31); **26**, 198-204 (1912-01-03–1912-06-28); **27**, 260-265 (1912-07-01–1912-12-31).

05., –10.1903 used in Strasbourg's "Von den Instrumenten . . . " and "Verzeichnis der im . . . ," see 60.

At ISC: 07.1914–11.1917, 01.1918–12.1918 (Helwan).

Helwan Observatory Bulletins, Volume 1, 1911–1920 (?).

*Ismail, A. (1960). Near and local earthquakes of Helwan (1903–1950), Bulletin of Helwan Observatory **49**.*

Used in the BAASSC (1913–1917) 1913–1915.

51. Tartu (Dorpat, Jurjew, Iouriev, Iourïev)

Rudolph (1903a, b).

Bulletin of Imperial Russia 1902–1908, see 168.

*Orloff, A. (1906). Über die Seismogramme des Zöllnerschen Horizontalpendels. Sitzungsberichte der Dorpatischen Naturforschenden Gesellschaft 1906 **15**, 3.*

52. Fiji

Used in the BAASSC (1913–1917) 1914.

53. Besançon

Included in "Annales du Bureau . . . " of France, see 55.

54. Clermont-Ferrand

Since 11.1913 included in "Annales du Bureau . . . " of France, see 55.

55. France

Annales du Bureau Central Météorologique de France, Bulletin Sismologique, 1910–1919.

In Hamburg: Bulletin Mensuel du Bureau Central Météorologique de France, 1901–1913.

At ISC: 1913.

56. Grenoble

*Reboul, P. (1907). Notes sur la sismologie et les séismes régistrés en Dauphiné (1893–1906). Travaux du Lab. Géol. Univ. de Grenoble **8**, 1905–1907, 97-110.*

Observations used in 1895 as reference in the national bulletin of Italy, see 107.

57. Marseille

Since 10.1910 included in "Annales du Bureau . . . " of France, see 55.

58. Paris (Parc St. Maur)

Included in "Annales du Bureau . . . " of France, see 55.

Observations sismologique de la Station du Parc Saint-Maur, 1915–1920.

Bulletin Sismique (handwritten), 1920.

Used in the BAASSC (1913–1917) 1913–1915.

BGS: 1911–1920.

59. Puy-de-Dôme

Included in "Annales du Bureau . . . " of France, see 55.

60. Strasbourg (Strassburg, Straßburg)

Rebeur-Paschwitz (1895).

Ehlert, Reinhold (1898). Horizontalpendelbeobachtungen im Meridian zu Straßburg i. E. von April bis Winter 1895. Beiträge zu Geophysik **3**, 131-215.

Rudolph (1903a, b).

Shide Circular **4**, 101 (1901-01-07–1901-05-28); **5**, 127 (1901-06-13–1901-09-28).

Bericht No. 1, Erdbeben im Juli 1900–Bericht No. 6, Erdbeben im Dezember 1900.

Bericht No. 1, Erdbeben im Januar 1901–Bericht No. 12, Erdbeben im Dezember 1901.

Beobachtungen an Erbebenmessern Januar 1902–Dezember 1902. *Ibid.,* Januar 1903–April 1903.

Von den Instrumenten der Hauptstation aufgezeichnete Seismogramme nebst Angaben anderer Stationen über dieselben Beben. Mai 1903. *Ibid.,* Juni 1903.

Verzeichnis der im Juli 1903 registrierten Beben, soweit solche bis 01. II. 1904 zur Kenntnis der Hauptstation gelangt sind.

Verzeichnis der im August 1903 registrierten Beben, soweit solche bis 14. III. 1904, *ibid*.

Verzeichnis der im September 1903 registrierten Beben, soweit solche bis 24. III. 1904, *ibid*.

Verzeichnis der im Oktober 1903 registrierten Beben, soweit solche bis 28. IV. 1904, *ibid*.

Verzeichnis der im November 1903 registrierten Beben, soweit solche bis 28. V. 1904, *ibid*.

Verzeichnis der im Dezember 1903 registrierten Beben, soweit solche bis 28. VI. 1904, *ibid*.

Verzeichnis der im Januar 1904 registrierten Beben, soweit solche bis 22. XI. 1904, *ibid*.

Verzeichnis der im Februar 1904 registrierten Beben, soweit solche bis 15. II. 1905, *ibid*.

Verzeichnis der im März 1904 registrierten Beben, soweit solche bis 15. III. 1905, *ibid*.

Mainka Carl (1910). Seismometrische Beobachtungen in Strassburg i. E. in der Zeit vom 1. Januar bis 31. Dezember 1905. Beträge zur Geophysik **10**, 387-467.

Wöchentlicher Erdbebenbericht der Kaiserlichen Hauptstation für Erdbebenforschung zu Straßburg. No. 1 (1905, Mai 29)–No. 31 (Dezember, 31 1905) (handwritten).

Wöchentlicher Erdbebenbericht der Kaiserlichen Hauptstation für Erdbebenforschung zu Straßburg i. Els. für das Jahr 1906. No. 1–52 (handwritten), with "Anleitung zum Beobachten von Erdbeben," Beilage zu Nr. 108 der Straßburger Korrespondenz, Dienstag den 11. September 1906, "Makroseismischer Monats-Bericht, April 1906," and "Makroseismischer Monats-Bericht, Mai 1906." *Ibid.,* Jahr 1907. No. 1–52 (handwritten), with "Beilage zum Wochenbericht No. 1 des Jahres 1907" and "Makroseismische Nachrichten." *Ibid.,* No. 1–52, 1908 (handwritten), with "Zur Bestimmung der Epizentren."

Kaiserlichen Hauptstation für Erdbebenforschung in Straßburg i. E., Makroseismische Nachrichten No. 5–31, 1908 (handwritten).

Wöchentlicher Erdbebenbericht der Kaiserlichen Hauptstation für Erdbebenforschung zu Straßburg i. E. 1909. No. 1–51, 1909 (handwritten).

Kaiserlichen Hauptstation für Erdbebenforschung in Straßburg i. E., Makroseismische Nachrichten No. 1–13, 1909 (handwritten).

Monatliche Übersicht der an der Kaiserlichen Hauptstation für Erdbebenforschung in Straßburg i. E. bekannt gewordenen Erdbeben. No. 1, Juli–No. 6, Dezember, 1909.

Wöchentlicher Erdbebenbericht der Kaiserlichen Hauptstation für Erdbebenforschung zu Straßburg i. E. 1910. No. 1–6, 9–30 (handwritten).

Seismometrische Aufzeichnungen der Kaiserl. Hauptstation für Erdbebenforschung i. Straßburg i. Els. No. 31–52, 1910 (handwritten).

Monatliche Uebersicht der an der Kaiserl. Hauptstation für Erdbebenforschung in Straßburg i. E. bekannt gewordenen Erdbeben. No. 1, Januar–No. 3, März, 1910.

Monatliche Uebersicht über die seismische Tätigkeit der Erdrinde nach den der Kaiserl. Hauptstation für Erdbebenforschung in Straßburg i. E. zugegangenen Nachrichten. No. 4, April–No. 12, Dezember, 1910.

Seismometrische Aufzeichnungen der Kaiserl. Hauptstation für Erdbebenforschung i. Straßburg i. Els. No. 1–52, 1911.

Monatliche Uebersicht über die seismische Tätigkeit der Erdrinde nach den der Kaiserl. Hauptstation für Erdbebenforschung in Straßburg i. E. zugegangenen Nachrichten. No. 1, Januar–No. 12, Dezember, 1911.

Strassburg i. E., Seismische Aufzeichnungen der Kaiserlichen Hauptstation für Erdbebenforschung, No. 1–52, 1912.

Mitteilungen über Erdbeben im Jahre 1912. Hauptstation für Erdbebenforschung früher in Straßburg, zurzeit in Jena. Jena 1920, 26 pp., handwritten.

Strassburg i. E., Seismische Aufzeichnungen der Kaiserlichen Hauptstation für Erdbebenforschung, No. 1–52, 1913.

Mitteilungen über Erdbeben im Jahre 1913. Hauptstation für Erdbebenforschung früher in Straßburg, zurzeit in Jena. Jena 1920, 26 pp., handwritten, partly typed [January–June, 1913].

Strassburg i. E., Seismische Aufzeichnungen der Kaiserlichen Hauptstation für Erdbebenforschung, No. 1–52, 1914.

Strassburg i. E., Seismische Aufzeichnungen der Kaiserlichen Hauptstation für Erdbebenforschung, Aperiodische Pendel mit galvanometrischer Registrierung nach Galitzin (analyzed by Beno Gutenberg). 02.–07., 12.1914–05.1915.

Strassburg i. E., Seismische Aufzeichnungen der Kaiserlichen Hauptstation für Erdbebenforschung, No.1–23 (December, 31) 1915. *Ibid.,* No. 1–24 (December, 27), 1916.

In Hamburg: Rothé, E. (1920). Annuaire de l'Institut de Physique du Globe 1919, Deuxième Partie: Sismologie, 16 pp.

In Hamburg: Rothé, E. (1922). Ibid., 1920, 59 pp.

61. Akhalkalaki

Included in: Seismische Monatsberichte des Physikalischen Observatoriums zu Tiflis, 04.1903–09.1909, see 64.

Bulletin of Imperial Russia 1904–1908, see 168.

62. Batumi (Batoum, Batum)

Included in: Seismische Monatsberichte des Physikalischen Observatoriums zu Tiflis, 04.1903–09.1909, see 64.

Bulletin of Imperial Russia 1904–1908, see 168.

63. Borjomi (Boržom, Borjom, Borshom)

Included in: Seismische Monatsberichte des Physikalischen Observatoriums zu Tiflis, 01.1903–09.1909, see 64.

Bulletin of Imperial Russia 1904–1908, see 168.

64. Tbilisi (Tblissi, Tiflis)

Ezemesjacnyja svedenija o zemletrjasenijach, otmecennych trojnym gorizontal'nym majatnikom Reber-Elert v Tiflisskoj Fiziceskoj Observatorii, 1900–1902. Ezemesjacnyj

sejsmiceskij bjulleten' Tiflisskoj Fiziceskoj Observatorija, 04.1903–10.1909.

In Hamburg: Seismische Monatsberichte des Physikalischen Observatoriums zu Tiflis, 1900–1909.

Shide Circular **8**, 254–256 (1903-01-02–1903-07-27); **9**, 292 (1903-08-02–1903-11-29).

Bulletin of Imperial Russia 1902–1908, see 168.

06., 09.1903, 01.–03.1904 used in Strasbourg's "Von den Instrumenten . . . " and "Verzeichnis der im . . . ," see 60.

Wöchentliche Erdbebenberichte des Physikalischen Observatoriums zu Tiflis (1910–1911).

Monthly bulletin of Tiflis seismological station 1910–1916.

In Hamburg: Erdbebenberichte Tiflis, 1912–1914.

At ISC: 01.–06.1906, 03., 05.–08.1910, 01.1911–06.1914.

Used in the BAASSC (1913–1917) 1913–1914.

NOAA: 07.1910–12.1911, 02.1913.

BGS: 1913.

65. Aachen

Erdbebenstation der Technischen Hochschule in Aachen. Handwritten monthly reports: 09.1906–07.1914.

66. Biberach

Published together with Hohenheim (see 72) in Mack, Karl (1915, 1916, 1917).

67. Bochum

Mintrop, L. (1909): Die Beobachtungen der Bochumer Erdbeben station in der Zeit vom 1. Dezember 1908 bis 1 juli 1909. Glückauf, **45**, 1006-1009.

*Beobachtungen der Erdbebenstation der Westfälischen Berggewerschaftskasse in der Zeit vom 20. Dez. 1909 bis zum 19. Dez. 1910. Glückauf **46**,* 1910.

Weekly reports published in Glückauf until 1945.

68. Darmstadt, Jugenheim

Beobachtungen der seismischen Station 01.–06.1912 (printed).

At ISC: 01., 05., 06., 08.–10.1911, 04.–06.1912, 03.– 04.1913, 01.–04.1914.

69. Göttingen

Linke, Frank, and Emil Wiechert (1903). Monatsberichte über seismische Registrierungen in Göttingen, 1903 Januar. Königlich Geophysikalisches Institut zu Göttingen, 4 pp.

Borne, Georg von dem (1904). Seismische Registrierungen in Göttingen, Juli bis Dezember 1903. Nachrichten von der Königlichen Gesellschaft der Wissenschaften zu Göttingen, Mathematisch-physikalische Klasse, 440-464.

Schering, H. (1905). Seismische Registrierungen in Göttingen im Jahre 1904. *Ibid.,* 181-200.

Angenheister, Gustav Heinrich (1906). Seismische Registrierungen in Göttingen im Jahre 1905 (including: Ernst Wiechert: Uebersicht über die registrierenden Seismometer der Station (pp. 377-379). *Ibid.,* 357-416.

Zoeppritz, Karl (1908). Seismische Registrierungen in Göttingen im Jahre 1906. *Ibid.,* 129-190.

Geiger, Ludwig (1909a). Seismische Registrierungen in Göttingen im Jahre 1907 mit einem Vorwort über Die Bearbeitung der Erdbebendiagramme. *Ibid.,* 107-123, and 124-151.

Geiger, Ludwig (1909b). Seismische Registrierungen in Göttingen im Jahre 1908 mit einem Vorwort über Hilfsmittel zur Berechnung der wahren Bodenschwankung. *Ibid.,* 152-165, and 166-203.

Geiger, Ludwig (1913). Seismische Registrierungen in Göttingen im Jahre 1909. *Ibid.,* 365-391.

Geiger, Ludwig (1914). Seismische Registrierungen in Göttingen im Jahre 1910. *Ibid.,* 245-271.

Ansel, A. (1913). Seismische Registrierungen in Göttingen im Jahre 1911. *Ibid.,* 289-325.

Geophysikalisches Institut-Göttingen, weekly reports: No. 1–52, 1912; No. 1–52, 1913; No. 1–41 (October 11), 1914 (all in single leaves).

70. Hamburg

Mittheilungen der Horizontalpendel-Station Hamburg, monthly reports: 10.1900–06.1903.

Mitteilungen der Hauptstation für Erdbebenforschung am Physikalischen Staatslaboratorium zu Hamburg 01.1903–09.1905, 11.1905–03.1906–12.1907.

05.1903–03.1904 used in Strasbourg's "Von den Instrumenten . . . " and "Verzeichnis der im . . . ," see 60.

Die seismischen Registrierungen in Hamburg. Mitteilungen der Hauptstation für Erdbebenforschung am Physikalischen Staatslaboratorium zu Hamburg, 1. April–31. Dezember 1908, weekly reports.

Tams, E. (1909). Die seismischen Registrierungen in Hamburg vom 1. April 1908 bis zum 31. Dezember 1908. Mitteilungen aus dem physikalischen Staatslaboratorium in Hamburg. 6. Beiheft zum Jahrbuch der Hamburgischen Wissenschaftlichen Anstalten **26 1908**.

Tams, E. (1910). Die seismischen Registrierungen in Hamburg vom 1. Januar 1909 bis zum 31. Dezember 1909 nach den Beobachtungen der Hauptstation für Erdbebenforschung am physikalischen Staatslaboratorium in Hamburg. Mitteilungen aus dem physikalischen Staatslaboratorium in Hamburg. 5. *Ibid.,* **27 1909**.

Mitteilungen der Hauptstation für Erdbebenforschung am Physikalischen Staatslaboratorium zu Hamburg 1. Januar bis 31. Dezember 1909, weekly reports. *Ibid.,* 1910. *Ibid.,* 1911.

Monatliche Mitteilungen der Hauptstation für Erdbebenforschung am Physikalischen Staatslaboratorium zu Hamburg, 01.1912–12.1913, 08.1914–03.1915, 01.1918–12.1920.

At ISC: 04.–12.1915.

71. Heidelberg (Königstuhl)

Grossherzogliche Sternwarte Heidelberg, or Astrophysikalisches Institut Koenigstuhl-Heidelberg, or Koenigstuhl-Sternwarte Heidelberg, or Grossherzoglich Badische Sternwarte Heidelberg: monthly reports: 06.1909–12.1913, 02.1914–09.1916.

72. Hohenheim

Mack, Karl (1907). Die Erdbebenwarte in Hohenheim und ihre Einrichtung und Erderschütterungen in Hohenheim während des Zeitraums vom 1. April 1905 bis 31. Dezember 1906. Deutsches Meteorologisches Jahrbuch 1906, Württembergisches Teilheft, 8 pp.

Mack, Karl (1908–1917). Nachrichten von der Hohenheimer Erdbebenwarte aus dem Jahr 1907 und Erderschütterungen in Hohenheim während des Jahres 1907. Deutsches Meteorologisches Jahrbuch 1907, Württembergisches Teilheft, 10 pp.; *Ibid.,* Jahrbuch 1908, 12 pp.; *Ibid.,* Jahrbuch 1909, 11 pp.; *Ibid.,* Jahres 1910., 16 pp.; *Ibid.,* Jahres 1911, 23 pp.; *Ibid.,* Jahres 1912, 12 pp.; *Ibid.,* Jahres 1913, 13 pp.; *Ibid.,* Jahres 1914, 20 pp.; *Ibid.,* Jahres 1915, 19 pp.; *Ibid.,* Jahres 1916, 1917, 1918, 45 pp.

Mack, Karl (1923?). Nachrichten von der Hohenheimer Erdbebenwarte und Erderschütterungen in Württemberg während des Jahres 1919, Manuscript 28 pp.

Mack, Karl (1923?). *Ibid.,* Jahres 1920, Manuscript 13 pp.

73. Jena

Monatliche Erdbebenberichte der Seismischen Station zu Jena, 04.1905–12.1911.

Monatliche Erdbebenberichte der Hauptstation für Erdbebenforschung zu Jena, 1912.

Pechau, W. (1914/15). 1913 Erdbebenaufzeichnungen der Hauptstation für Erdbebenforschung Jena.

74. Leipzig

Credner, H. (1898). Die sächsischen Erdbeben während d. Jahre 1889 bis 1897 insbesondere das sächsisch-böhmische Erdbeben vom 24. October bis 29. November 1897. Sächsische Gesellschaft der Wissenschaften zu Leipzig, 83 pp.

Credner, H. (1907). Die sächsischen Erdbeben während der Jahre 1904 bis 1906. Ber. math.-phys. Kl. Kgl. sächs. Gesellschaft der Wissenschaften zu Leipzig ***59****, 333-355.*

Etzold, Franz (1902). Das Wiechertsche astatische Pendelseismometer der Erdbebenstation Leipzig und die von ihm gelieferten Seismogramme von Fernbeben. *Ibid.,* **54**, 283-326.

Etzold, Franz (1903a). Die von Wiecherts astatischem Pendelseismometer in der Zeit vom 15. Juli bis 31. Dezember 1902 in Leipzig gelieferten Seismogramme von Fernbeben. *Ibid.,* **55**, 22-38.

Etzold, Franz (1903b). Bericht über die von Wiecherts astatischem Pendelseismometer in Leipzig vom 1. Januar bis 30. Juni 1903 registrierten Fernbeben und Pulsationen. *Ibid.,* **55**, 296-321.

Etzold, Franz (1904a). Vierter Bericht der Erdbebenstation Leipzig. Die in Leipzig vom 1. Juli 1903 bis 30. April 1904 von Wiecherts astatischem Pendelseismometer registrierten Erdbeben und Pulsationen. *Ibid.,* **56**, 289-295.

Etzold, Franz (1904b). Fünfter Bericht der Erdbebenstation Leipzig. I Die in Leipzig vom 1. Mai bis 31. Oktober 1904 registrierten Erdbeben und Pulsationen. II Über die Aufzeichnung der infolge des Läutens der Kirchenglocken zu Leipzig erzeugten Bodenschwingungen. *Ibid.,* **56**, 302-310.

Etzold, Franz (1906). Sechster Bericht der Erdbebenstation Leipzig. I. Die in Leipzig vom 1. November 1904 bis 31. Dezember 1905 und die in Plauen vom 17. August bis 31. Dezember 1905 aufgezeichneten Seismogramme. II. Die in Leipzig und Plauen vom 1. November 1904 bis 31. Dezember 1905 aufgezeichneten, nicht von Erdbeben herrührenden Bewegungen. *Ibid.,* **58**, 81-105.

Etzold, Franz (1907a). Siebenter Bericht der Erdbebenstation Leipzig. I. Die in Leipzig und Plauen vom 1. Januar bis 31. Dezember 1906 aufgezeichneten Seismogramme. II. Die in Leipzig und Plauen vom 1. Januar bis 31. Dezember 1906 aufgezeichneten pulsatorischen Bewegungen. *Ibid.,* **59**, 2-34.

Etzold, Franz (1907b). Achter Bericht der Erdbebenstation Leipzig. I. Die in Leipzig und Plauen vom 1. Januar bis 30. Juni 1907 aufgezeichneten Seismogramme. II. Die in Leipzig und Plauen vom 1. Januar bis 30. Juni 1907 aufgezeichneten pulsatorischen Bewegungen. *Ibid.,* **59**, 356-370.

Etzold, Franz (1908a). Neunter Bericht der Erdbebenstation Leipzig. I Die in Leipzig vom 1. Juli bis 31. Dezember 1907 aufgezeichneten Seismogramme. II Die in Leipzig und Plauen vom 1. Januar bis 30. Juni 1907 aufgezeichneten pulsatorischen und sonstige nicht seismischen Bewegungen. *Ibid.,* **60**, 57-78.

Etzold, Franz (1908b). Zehnter Bericht der Erdbebenstation Leipzig. I Die in Leipzig und Plauen vom 1. Januar bis 30. Juni 1908 aufgezeichneten Seismogramme. II Die in Leipzig und Plauen vom 1. Januar bis 30. Juni 1907 aufgezeichneten pulsatorischen und sonstige nicht seismischen Bewegungen. *Ibid.,* **60**, 223-239.

Etzold, Franz (1909). Elfter Bericht der Erdbebenstation Leipzig. Die in Leipzig und Plauen vom 1. Juni bis 31. Dezember 1908 aufgezeichneten Seismogramme. *Ibid.,* **61**, 62-91.

Etzold, Franz (1910). Zwölfter Bericht der Erdbebenwarte zu Leipzig. Die in Leipzig und Plauen während des Jahres 1909 aufgezeichneten Seismogramme. *Ibid.,* **62**, 3-31.

Etzold, Franz (1911). Dreizehnter Bericht der Erdbebenstation Leipzig. Die in Leipzig und Plauen während des Jahres 1910 aufgezeichneten Seismogramme. *Ibid.,* **63**, 291-315.

75. München

Messerschmitt, J.B. (1907). Die Registrierungen der letzten großen Erdbebenkatastrophen auf der Erdbebenstation in München. Mitteilungen der geographischen Gesellschaft in München **2**, 197-235.

Messerschmitt, J.B. (1909a). *Ibid.,* **4**, 127-131.

Messerschmitt, J.B. (1909b). Magnetische Beobachtungen in München aus den Jahren 1901 bis 1905 und Erdbebenregistrierungen vom Jahre 1905. Veröffentlichungen des Erdmagnetischen Observatoriums und der Erdbebenhauptstation bei der Königlichen Sternwarte in München **2**, 38-43.

Messerschmitt, J.B. (1909c). Registrierungen einiger südeuropäischer Erdbeben auf der Münchener Erdbebenstation. Sitzungsberichte der Königlich Bayerischen Akademie der Wissenschaften, Mathematisch-Physikalische Klasse 1909, 16. Abhandlung, 13 pp.

ISA: Messerschmitt, J.B. Seismische Beobachtungen in München 1908.

Brunhuber, A., and J.B. Messerschmitt (1910). Die Beobachtungen der beiden sächsisch-böhmischen Erdbebenschwärme vom Oktober und November 1908 im nordöstlichen Bayern und die Registrierungen auf der Münchener Erdbebenstation. Berichte des naturwissenschaftlichen Vereins zu Regensburg **12** (1907–1908).

München. Seismische Aufzeichnungen der Königlich Bayerischen Erdbeben-Hauptstation: Handwritten reports in single leaves: No. 1–No. 29 1911, No. 1–No. 30 1912, No. 1–No. 26 1913 and typescript copy No. 1–No. 16 1913, handwritten No. 1–No. 28 1914, No. 1–No. 28 1915.

München. Seismische Aufzeichnungen der Königlichen Erdbebenwarte München (Sternwarte): typescript No. 1–No. 21 1914, handwritten No. 1–No. 17 1916, No. 1–No. 18 1917, No. 1–No. 15 1918, No. 1–No. 14 1919, No. 1–No. 13 1920.

76. Nördlingen

Nördlingen. Seismische Aufzeichnungen der Königlich Bayerischen Erdbebenzweigstation I. Handwritten reports in single leaves: No. 1–No. 9 1912, No. 1–No. 9 1913, 10 pp. without numbering for 1914 and typescript copy No. 1–No. 7 1914, No. 1–No. 14 1915, No. 1–No. 11 1916, No. 1–No. 8 1917, No. 1–No. 8 1918, No. 1–No. 7 1919, No. 1–No. 6 1920.

77. Plauen

Published together with the bulletins of Leipzig, see 74.

78. Potsdam

Rebeur-Paschwitz (1889, 1892, 1895).

Rudolph (1903a, b).

BAASRP **1897**, 171 (1897-01-03–1897-03-06); **1899**, 184 (1897-10-02–1898-01-06).

Seismometrische Beobachtungen in Potsdam in der Zeit vom 1. April bis 31. Dezember 1902. Veröffentlichung des Königlich Preuszischen Geodätischen Institutes, Neue Folge.

Seismometrische Beobachtungen in Potsdam in der Zeit vom 1. Januar bis 31. Dezember 1903. *Ibid.*

Hecker, Oskar (1905). Seismometrische Beobachtungen in Potsdam in der Zeit vom 1. Januar bis 31. Dezember 1904. *Ibid.,* Neue Folge **21**, 6 + 119 pp.

Seismometrische Beobachtungen in Potsdam in der Zeit vom 1. Januar bis 31. Dezember 1905. *Ibid.*

Hecker, Oskar (1907–1910). Seismometrische Beobachtungen in Potsdam in der Zeit vom 1. Januar bis 31. Dezember 1906. *Ibid.,* Neue Folge **30**, 59 pp.; *Ibid.,* 1907, Neue Folge **35**, 64 pp.; *Ibid.,* 1908. *Ibid.,* Neue Folge **42**, 37 pp.

Meissner, O. (1910–1912). Seismometrische Beobachtungen in Potsdam in der Zeit vom 1. Januar bis 31. Dezember 1909. *Ibid.,* Neue Folge **47**, 26 pp.; 1910, Neue Folge **50**, 27 pp.; 1911, Neue Folge **55**, 46 pp.

Seismometrische Beobachtungen in Potsdam in der Zeit vom 1. Januar bis 31. Dezember 1912; *Ibid.*, 1913.; *Ibid.*, 1914, Neue Folge **64**, 25 pp; *Ibid.,*1915, Neue Folge **67**, 21 pp.; *Ibid.,* 1916, Neue Folge **73**, 19 pp.; *Ibid.,* 1917 and 1918., Neue Folge **76**, 25 pp.

Meissner, Otto, J. Picht, and R. Berger (1926). Seismometrische Beobachtungen in Potsdam in der Zeit vom 1. Januar 1919 bis 31. Dezember 1924. *Ibid.,* Neue Folge **96**, 18 pp.

79. Ravensburg

Mack, Karl (1923?). Erderschütterungen in Ravensburg während des Jahres 1919, Manuscript together with Hohenheim (see 72), 3 pp.

Mack, Karl (1923?). Erderschütterungen in Ravensburg während des Jahres 1920, Manuscript together with Hohenheim (see 72), 9 pp.

80. Taunus

Nachrichten des Taunus-Observatoriums des Physikalischen Vereins zu Frankfurt am Main–Seismische Aufzeichnungen der Von Reinach'schen Erdbebenwarte. Monthly reports July 1913–June 1914.

81. Wilhelmshaven

Rebeur-Paschwitz (1889, 1892, 1895).

82. Accra (Akkra)

Used in the BAASSC (1913–1917) 1914.

83. Athénai (Athens)

*In Hamburg: Annales de l'Observatoire National d'Athènes **1** (1896)–**3*** (1912).

*In Hamburg: Eginitis, D. (1905). Etude des séismes survenus en Grèce pédant les années 1900–1903. Annales de l'Observatoire National d'Athènes **IV**, 135, 488.*

*In Hamburg: Eginitis, D. (1910). Etude des séismes survenus en Grèce pédant les années 1904–1908. Ibid., **V**, 62-67, 586-587.*

*In Hamburg: Eginitis, D. (1912). Etude des séismes survenus en Grèce pédant les années 1909–1912. Ibid., **VI**, 36, 318-320.*

At ISC: 01.1912–09.1914, 11.1914–10.1915, 07.– 12.1918, 04.1919–12.1920.

84. Port-au-Prince

Bulletin annuel de la Société Astronomique et Météorologique de Port-au-Prince, Haïti, 1901–1910.

Used in the BAASSC (1913–1917) 1914.

Mouvements sismique. Microsismes enregistrés á Port-au-Prince par le pendule vertic. Macrosismes. Bull. Semestrial de l'Observatoire Mét. du Séminaire-Collége St. Martial, Port-au-Prince. Juillet–Décembre 1910 (1911), 149-150. Ibid., Janvier–Juin 1911 (1912), 59-61. Ibid., Juillet–Décembre 1911 (1912), 147–162.

In Hamburg: Port-au-Prince Haiti Bulletin Semestrial 1910–1920.

85. Budapest

In Hamburg: Berichte der Erdbebenwarte Budapest 1902–1905.

05., 06., 08., 09., 11., 12.1903, 02., 03.1904 used in Strasbourg's "Von den Instrumenten . . . " and "Verzeichnis der im . . . ," see 60.

1906–1912 in Kövesligethy (1907, 1909, 1913), see 86.

Kövesligethy, Radó (1920). Rapport sur les observations sismologiques faites pendant les années 1913–1919 á l'observatoire de Budapest.

L'Observatoire de Budapest, 1913–1920.

Used in the BAASSC (1913–1917) 1913–1914.

BGS: 1894–1914.

NOAA: Rapport sur . . . 01.1906–12.1920, monthly 01.1912–04.1913, 10.1913–06.1914.

86. Hungary

In Hamburg: Shaferzik: Ungarische Erdbeben 1885–1886.

In Hamburg: Az 1894/95 evekben Magyarorszagon eszlelt foeldrengesek, Die in den Jahren 1894/95 in Ungarn beobachteten Erdbeben.

In Hamburg: Az 1896/99 evekben Magyarorszagon eszlelt foeldrengesek, Die in den Jahren 1896/99 in Ungarn beobachteten Erdbeben.

In Hamburg: Réthly, A. (1909). Az 1900, 1901 1902 évi Magyarországi földrengések: a M. Kir. Földmivelésügyi Ministerium fenhatósága alatt álló M. Kir. Orsz. Meteorológiai és Földmágnességi Inézet hivatalos kiadványa, Die Erdbeben in Ungarn im Jahre 1900, 1901 und 1902. Offizielle Publikation der dem Kgl. Ung. Ackerbauministerium unterstehenden Kgl. Ung. Reichsanstalt für Meteorologie und Erdmagnetismus, pp. 130.

In Hamburg: Réthly, A. (1906). Az 1903. Ibid., Az 1904. Ibid. Az 1905.

In Hamburg: Réthly, A. (1907). Az 1906. Ibid., 143 pp.

Kövesligethy, Radó (1906). Rapport annuel sur les observations sismiques des pays de la sainte couronne de Hongrie (1906 Évi jelentés a Magyar szent korona országainak földrengési állomasairól).

In Hamburg: Réthly, A. (1908). Az 1907 évi Magyarországi földrengések: a M. Kir. Földmivelésügyi Ministerium fenhatósága alatt álló M. Kir. Orsz. Meteorológiai és Földmágnességi Inézet hivatalos kiadványa, Die Erdbeben in Ungarn im Jahre 1907. Offizielle Publikation der dem Kgl. Ung. Ackerbauministerium unterstehenden Kgl. Ung. Reichsanstalt für Meteorologie und Erdmagnetismus.

Bulletin Hebdomadaire des Observotois sismiques de la Hongrie et la Croatie, Avril 1909, No. 16-18.

*Réthly, A. (1912). Die in Ungarn im Jahre 1911 beobachteten Erdbeben. Földtani Közlöny **42**, 82-92.*

In Hamburg: Avis et bulletin macroseismique de Hongrie 1906–1913.

Kövesligethy, Radó (1909). Rapport sur les observations faites pendant les années 1907 et 1908 aux observatoires sismiques des pays de la sainte couronne de Hongrie (Levö földrengési observatoriumokban 1907 es 1908 országani területén. Években vegzett megfigyelésekröl).

Kövesligethy, Radó (1913). Rapport sur les observations faites pendant les années 1909–1912 aux observatoires sismologique de Hongrie.

At ISC: 1896–1907, 1912, 1913, 1920.

NOAA: 1903–1913.

87. Kalocsa

1906–1912 in Kövesligethy (1907, 1909, 1913), see 86.

BGS: 1912–1920.

88. Reykjavik

At ISC: 01.–12.1910.

NOAA: 1910.

BGS: 1910.

Bulletin sismique de la Station Internationale de Reykjavik, 1910.

Übersicht über die an der Internationalen Erdbebenstation in Reykjavik registrierten Erdbebenstörungen, 1913 Januar–April. Mitteilungen des Zentralbureaus der Internationalen Seismologischen Assoziation **1**, **Nr. 2** (1913), 40. Supplement to: Gerlands Beträge zur Geophysik **13** (1914). *Ibid.,* 1913 Mai–Juli, **1**, **Nr. 4** (1914), 97–100. Supplement to: Gerlands Beträge zur Geophysik **13** (1914). *Ibid.,* 1913 August–Dezember, **2**, **Nr. 1** (1915), 19-21. Supplement to: Gerlands Beträge zur Geophysik **14** (1915–1918).

89. Bombay (Colaba)

BAASRP **1899**, 176-177 (1898-09-13–1899-03-23).

Shide Circular **1**, 13 (1898-09-22–1899-12-31); **2**, 44-45 (1900-01-04–1900-06-04); **3**, 85-86 (1900-07-29–1900-01-25); **4**, 108 (1901-01-07–1901-06-24); **5**, 135 (1901-08-06–1901-12-31); **6**, 159-160 (1902-01-01–1902-06-16); **7**, 208 (1902-07-09–1902-12-30); **8**, 242 (1903-01-04–1903-06-08); **9**, 287 (1903-08-11–1903-12-28); **10**, 309 (1904-01-20–1904-06-27); **11**, 333 (1904-07-18–1904-12-20); **12**, 15 (1905-01-22–1905-06-14); **13**, 43 (1905-07-02–1905-12-10); **14**, 80 (1906-01-06–1906-06-24); **15**, 122 (1906-07-14–1906-12-26); **16**, 171 (1907-01-01–1907-06-25); **17**, 202 (1907-07-09–1907-12-30); **18**, 239 (1908-01-11–1908-06-28); **19**, 274 (1908-07-13–1908-12-28); **20**, 315-316 (1909-01-04–1909-06-28); **21**, 366 (1909-07-07–1909-12-22); **22**, 409 (1910-01-01–1910-06-29); **23**, 36 (1910-07-07–1910-12-30); **24**, 88 (1911-01-01–1911-06-28); **25**, 152 (1911-06-30–1911-12-31); **26**, 216-217 (1912-01-04–1912-06-29); **27**, 266 (1912- 07-07–1912-12-28).

Magnetical, Meteorological, Atmospheric Electric and Seismographic Observations made at the Government Observatories, Bombay and Alibag in the years 1898–1899, 1900–1905, 1906–1910, 1911–1915, 1916– 1920.

90. Calcutta (Alipore)

BAASRP **1899**, 177-178 (1899-01-18–1899-03-26).

Shide Circular **1**, 11 (1899-09-29–1899-12-06); **3**, 84-85 (1900-07-07–1900-12-31), **4**, 108 (1901-01-08–1901-06-26); **5**, 134 (1901-07-04–1901-12-26); **6**, 158-159 (1901-12-31–1902-06-11); **7**, 207 (1902-07-09–1902-12-16); **8**, 240-242 (1903-01-04–1903-06-23); **9**, 286 (1903-07-01–1903-12-23);

10, 309 (1904-01-16–1904-06-27); **11**, 332 (1904-07-23–1904-12-20); **12**, 14 (1905-01-08–1905-06-30); **13**, 42-43 (1905-07-06–1905-12-18); **14**, 79-80 (1906-01-06–1906-06-29); **15**, 121-122 (1906-07-13–1906-12-23); **16**, 169 (1907-01-02–1907-06-30); **17**, 201 (1907-07-04–1907-12-25); **19**, 272-273 (1908-01-11–1908-12-18); **20**, 317-318 (1908-01-22–1908-06-22); **21**, 367-368 (1909-07-07–1909-12-23); **23**, 35-36 (1910-01-01–1910-12-30); **24**, 86-87 (1910-07-05–1911-06-17); **25**, 151-152 (1911-07-04–1911-12-31); **26**, 215-216 (1912-01-04–1912-06-29).

06., 12.1903 used in Strasbourg's "Von den Instrumenten . . . " and "Verzeichnis der im . . . ," see 60.

Used in the BAASSC (1913–1917) 1913–1914.

91. Kodaikánal

Shide Circular **2**, 44 (1900-02-08–1900-06-21); **3**, 86-88 (1900-07-12–1900-12-30); **4**, 109 (1901-01-07–1901-06-24); **5**, 135-137 (1901-07-16–1902-01-01); **6**, 160-161 (1902-01-01–1902-06-28); **7**, 208-209 (1902-07-05–1902-12-28); **8**, 243-244 (1903-01-06–1903-06-22); **9**, 287-288 (1903-07-16–1903-12-28); **10**, 310 (1904-03-02–1904-06-29); **11**, 333-334 (1904-07-23–1904-12-20); **12**, 15-16 (1905-01-22–1905-06-30); **13**, 44 (1905-07-06–1905-12-10); **14**, 81 (1906-01-06–1906-06-24); **15**, 123 (1906-07-10–1906-12-26); **16**, 171-172 (1907-01-02–1907-06-25); **17**, 202 (1907-09-02–1907-12-30); **18**, 240 (1908-01-11–1908-06-30); **19**, 274-275 (1908-07-13–1908-12-28); **20**, 316-317 (1909-01-22–1909-06-27); **21**, 367 (1909-07-07–1909-12-29); **22**, 410 (1910-01-01–1910-06-29); **23**, 37 (1910-07-07–1910-12-30); **24**, 89 (1911-01-01– 1911-06-17); **25**, 153-154 (1911-07-04–1911-12-31); **26**, 218 (1912-01-04–1912-06-26); **27**, 266-267 (1912-07-07–1912-12-28).

06., 12.1903 used in Strasbourg's "Von den Instrumenten . . . " and "Verzeichnis der im . . . ," see 60.

At ISC: 01.1907–06.1907.

Bulletin Kodaikanal Observatory, 1908–1920.

Used in the BAASSC (1913–1917) 1913–1915.

92. Madras

BAASRP **1899**, 175 (1898-05-21–1899-02-10).

Shide Circular **1**, 12 (1899-03-17–1899-11-24).

93. Simla

*In Hamburg: Patterson, J. (1909). The Simla seismograms obtained between June 1905 and November 1908. Memoirs of the Indian Meteorological Department **20**, part 3, 33-.*

01.–12.1916 published in BAASSC (1916) as supplement to "Large Earthquakes of 1916."

Used in the BAASSC (1913–1917) 1914–1915.

94. Indonesia

At KNMI: Vulkanische Verschijnslen en Aardbevingen in den Oost-Indischen Archipel, waargenomen gedurende het jaar: 1898–1920. Natuurk. Tijdschr. voor Ned.-Indiï.

In Hamburg: Indonesia, 1900–1913.

BGS: 1881–1920.

95. Jakarta (Batavia)

BAASRP **1899**, 178-179 (1898-06-04–1899-03-12).

Shide Circular **1**, 18–21 (1899-01-03–1900-01-21); **2**, 45-47 (1900-01-24–1900-06-26); **3**, 88-90 (1900-07-08–1900-12-28); **4**, 110 (1901-01-04–1901-06-25); **5**, 137-138 (1901-07-04–1901-12-30); **6**, 161-162 (1902-01-03–1902-06-29); **7**, 209-210 (1902-07-06–1902-12-28); **8**, 244-246 (1903-01-01–1903-06-25); **9**, 288 (1903-07-03–1903-12-31); **10**, 310-311 (1904-01-01–1904-06-22); **11**, 334-335 (1904-07-01–1904-12-23); **12**, 16 (1905-01-08–1905-06-30); **13**, 45-47 (1905-07-03–1905-12-28); **14**, 82-83 (1906-01-15–1906-06-30); **15**, 124-126 (1906-07-01–1906-12-27); **16**, 172-173 (1907-01-01–1907-06-27); **17**, 204-205 (1907-07-01–1907-12-30); **18**, 242-243 (1908-01-05–1908-06-30); **20**, 322-323 (1908-07-01–1908-12-28); **21**, 369-371 (1909-01-01–1909-06-30).

Observations made at the Royal Magnetical and Meteorological Observatory at Batavia, 1900–1906.

1904 used in Rudolph (1907).

05.–07., 09.–12.1903, 01., 03.1904 used in Strasbourg's "Von den Instrumenten . . . " and "Verzeichnis der im . . . ," see 60.

*Bemmelen, W. van. Observations made at the Royal Magnetical and Meteorological Observatory at Batavia 1906. Volume **29**.*

Bemmelen, W. van. Seismological Bulletin, Batavia Observatory, Java, 1909–1911.

Erdbeben Bericht, Koninklijk Magnetisch en Meteorologisch Observatorium, Batavia, 1909.

Seismological Bulletin, Royal Magnetical and Meteorological Observatory, Koninklijk Magnetisch en Meteorologisch Observatorium Batavia, 1910–1920.

Used in the BAASSC (1913–1917) 1913–1915.

BGS: 1881–1920.

NOAA: 1900–1920.

96. Koeta Radja, Sumatra

1904 used in Rudolph (1907).

01.–03.1904 used in Strasbourg's "Verzeichnis der im . . . ," see 60.

97. Cork

Shide Circular **26**, 192 (1912-01-04–1912-05-23); **27**, 256 (1912-08-09–1912-12-09).

Annual Bulletins of the University 1912–1918.

98. Limerick

Used in the BAASSC (1913–1917) 1913–1914.

99. Benevento

From 02.1895 included in the national bulletin of Italy, see 107.

100. Casamicciola (Isola d'Ischia)

From 02.1895 included in the national bulletin of Italy, see 107.
BAASRP **1897**, 170 (1896-06-14–1897-02-19); **1899**, 187 (1898-04-15–1899-03-07).
Rudolph (1903a, b).

101. Catania

From 04.1895 included in the national bulletin of Italy, see 107.
BAASRP **1898**, 198 (1897-03-23–1898-01-29); **1899**, 188-189 (1898-03-29–1899-03-23).
Rudolph (1903a, b).
Arcidiacono, S. (1903). Sui recenti terremoti etnei, Bullettino dell'Accademia Gioenia di scienze naturali in Catania, Fascicolo LXXIX–Dicembre 1903.
At ISC: 01.–07.1908, 10.1907–06.1909.
Bulletino Sismologico from 10.1913.
NOAA: 1911–1915.

102. Chiavari

At ISC: 01.1913–12.1914.

103. Firenze (Quarto-Castello)

In Hamburg: Stiattesi, D. Raffaello (1900–1903). Spoglio delle osservazioni sismiche dal 1° Novembre 1898 al 31° Ottobre 1899 (anno meteorico 1899). Bollettino sismografico dell' Osservatorio di Quarto (Firenze), 79 pp.; Ibid., 1° Novembre 1899 al 31° Ottobre 1900 (anno meteorico 1900), 62 pp.; Ibid., 1° Novembre 1900 al 31° Luglio 1901, 71 pp.; Ibid., 1° Agosto 1901 al 31° Luglio 1902, 73 pp.; Ibid., 1° Agosto 1902 al 30° Novembre 1903, 84 pp.
At KNMI: Stiattesi, D. Raffaello (1909). Spoglio delle osservazioni sismiche dal 1° Dicembre 1903 al 30° Novembre 1906. Ibid., 115 pp.
11.1903 Used in Strasbourg's "Verzeichnis der im . . . ," see 60.
ISA: 1904–1908.
BGS: 1903–1906.

104. Firenze (Querce)

At KNMI: 1898–1906.
At ISC: 01.1905–04.1906, 01.1911–05.1914, 09.–10. 1914, 01.–12.1920.
From 03.1895 included in the national bulletin of Italy, see 107.
Used in the BAASSC (1913–1917) 1913–1914.

105. Firence (Ximeniano)

From 02.1895 included in the national bulletin of Italy, see 107.
In Hamburg: Osservazioni dell'anno 1901. Bollettino sismologico dell'Osservatorio Ximeniano dei PP. Delle Scuole Pie di Firenze, Anno 1, Firenze 1902, 103 pp.; dell'anno 1902, 46 pp.; dell'anno 1903; dell'anno 1904.
In Hamburg: Osservatorio Ximeniano, Registrazioni sismiche 1901–1905.
05.1903–03.1904 used in Strasbourg's "Von den Instrumenten . . . " and "Verzeichnis der im . . . ," see 60.
ISA: 1904–1908.
Registrazioni sismografiche all'Osservatorio Ximeniano Firenze, 1901–1903.
Osservazioni dell'anno 1909. Bollettino sismologico dell'Osservatorio Ximeniano dei PP. Delle Scuole Pie di Firenze; Ibid., dell'anno 1914.
Registrazioni sismiche, Osservatorio Ximeniano dei Padri delle Scuole Pie, No 13, 1913.
Pubblicazioni dell'Osservatorio Ximeniano dei Padri Scolopi, 1913–1920.
BGS: 1901–1920.
NOAA: 01.–04.1908, 11.1908–04.1909, 12.1909, 02.– 06.1910, 07., 08., 12.1913, 01., 03., 05., 06., 1914, 1919, 1920.

106. Genova

From 02.1895 included in the national bulletin of Italy, see 107.

107. Italy

1894 and earlier: the editorial notice to Baratta (1895) contains the following sentence: "La presente pubblicazione tiene luogo del ***Supplemento*** *che, con le notizie sismiche a tutto il 1894, fu unito* ***Bollettino quotidiano del R. Ufficio Centrale di Meteorologia e di Geodinamica****." (This publication replaces the* ***Supplemento*** *which, together with the seismic news until 1894, was joint to the dailly* ***Bollettino quotidiano del R. Ufficio Centrale di Meteorologia e di Geodinamica****.)*
Many Italian station readings for the years 1894–1897 were included in Rudolph (1904).
Baratta, Mario (1895). Notizie sui terremoti avvenuti in Italia durante l'anno 1895. Regio Ufficio Centrale di Meteorologia e Geodinamica, 230 pp. Appendice al Bollettino della Società Sismologica Italiana **1**.
Palazzo, Luigi (1896). Notizie sui terremoti avvenuti in Italia durante l'anno 1896, 171 pp. *Ibid.,* **2**.
Agamennone, Giovanni (1897–1900). Notizie sui terremoti osservati in Italia durante l'anno 1897, 318 pp. Appendice al Bollettino della Società Sismologica Italiana **3**; l'anno 1897 (2.° semestre), 255 pp., **4**; *Ibid.,* l'anno 1898, 301 pp., **5**.
Cancani, Adolfo (1900–1904). Notizie sui terremoti osservati in Italia durante l'anno 1899, 293 pp. Appendice al Bollettino della Società Sismologica Italiana, **6**; *Ibid.,* l'anno 1900, 259 pp., **7**; l'anno 1901, 540 pp., **8**; *Ibid.,* l'anno 1902, 559 pp., **9**.
Agamennone, Giovanni (1904–1905). Notizie sui terremoti osservati in Italia durante l'anno 1903, 585 pp. *Ibid.,* **10**.
Monti, Virgilio (1906–1907). Notizie sui terremoti osservati in Italia durante l'anno 1904, 583 pp., Appendice al Bollettino della Società Sismologica Italiana, **11**; *Ibid.,* l'anno 1905, 658 pp., **12**.
Martinelli, Giuseppe (1908–1914 [1923]). Notizie sui terremoti osservati in Italia durante l'anno 1906, 521 pp. Appendice al Bollettino della Società Sismologica Italiana, **13**; *Ibid.,* l'anno 1907, 567 pp., **14**; *Ibid.,* l'anno 1908, 645 pp., **15**; *Ibid.,* l'anno 1909, 629 pp., **16**; *Ibid.,* l'anno 1910, 647 pp., **17**; *Ibid.,* l'anno 1911, 587 pp., **18**.
Cavasino, Alfonso (1934–1935). Notizie sui terremoti osservati in Italia durante l'anno 1912. Regio Ufficio Centrale di

Meteorologia e Geodinamica, 431 pp.; *Ibid.,* l'anno 1913, 438 pp.

Cavasino, Alfonso (1927). Bollettino sismico anno 1917, Fasc. 1, Microsismi, Regio Ufficio Centrale di Meteorologia e Geodinamica, 127 pp.; *Ibid.,* anno 1918, 102 pp.; *Ibid.,* anno 1919, 127 pp.; *Ibid.,* anno 1920, 136 pp.

Ingrao, G. (1927a). Bollettino sismico anno 1917, Fasc. 2, Macrosismi, Regio Ufficio Centrale di Meteorologia e Geodinamica, 46 pp.; *Ibid.,* anno 1918, 22 pp.; *Ibid.,* anno 1919, 26 pp.; *Ibid.,* anno 1920, 27 pp.

108. Messina

In Hamburg: Annuario dell'anno 1906. Osservatorio di Messina. Istituto di Fisica Terrestre e Meteorologia delle R. Università. Messina 1904–1907.

109. Mileto (Morabito)

Labozzetta, R. Bolletino sismologico dell'Osservatorio "Morabito" nel seminario di Mileto (Calabria) ***1****, 1908.*
At ISC: 01.–06.1908, 10.1908–12.1909, 07.1910– 12.1912.
BGS: 1910–1912.

110. Mineo (Guzzanti)

From 01.1895 included in the national bulletin of Italy, see 107.
In Hamburg: Osservatorio Meteorico-Geodinamico "Guzzanti" in Mineo, Bollettino Mensile 1900–1910.

111. Moncalieri, close to Torino (Turin)

At ISC: 12.1906–12.1920.
In Hamburg: Moncalieri Bollettino Osservazioni sismiche 1907–1920.
BGS: 1908–1920.
NOAA: 12.1908–12.1920.
Used in the BAASSC (1913–1917) 1914–1915.

112. Monte Cassino (Montecassino)

Used in the BAASSC (1913–1917) 1913–1914.
NOAA: 1911, 1914–07.1916, 11.1916–12.1917, 01.–03. 1919.

113. Padova (Padua)

From 02.1895 included in the national bulletin of Italy, see 107.
Rudolph (1903a, b).
NOAA: 09.1895–06.1901, 01.–06.1902, 1903, 1904, 08.1910–08.1912, 10.1912–09.1913, 03.1914– 09.1915.
At ISC: 01.–12.1903.
05.1903–03.1904 used in Strasbourg's "Von den Instrumenten . . . " and "Verzeichnis der im . . . ," see 60.
Bolletino mensile delle registrazioni dei microsismografi dell'Istituto di Fisica della R. Universita Padova. A. R. I. Veneto di Sc., lett. ed Arti ***66****, 1906/07; Ibid.,* ***67****, 1907/08.*
In Hamburg: Bolletino Mensile di Padova 1907–1913.
Used in the BAASSC (1913–1917) 1913–1915.

114. Pavia

From 02.1895 included in the national bulletin of Italy, see 107.
Rudolph (1903a, b).

115. Pisa (Capannoli, Baldini)

BGS: Bolletino sismologico dell'Osservatorio Baldini. Capannoli, Pisa, 1910–1912.
At ISC: 03.–09., 11.1910–02.1911, 07.–12.1911.
NOAA: Osservatorio Baldini 07.–12. 1911.

116. Portici (Napoli)

From 02.1895 included in the national bulletin of Italy, see 107.

117. Reggio di Calabria

From 01.1895 included in the national bulletin of Italy, see 107.

118. Rocca di Papa

From 01.1895 included in the national bulletin of Italy, see 107.
Rudolph (1903a, b).
BAASRP **1897**, 172 (1896-06-14–1897-02-19); **1898**, 194 (1897-05-23–1898-01-29); **1899**, 186 (1898-04-15–1899-03-07).
Used in the BAASSC (1913–1917) 1915.
BGS: 1912–1920.
NOAA: 1917–1920.

119. Roma

From 01.1895 included in the national bulletin of Italy, see 107.
Rudolph (1903a, b).
At ISC: 07.–12.1920.

120. Siena

Vicentini, G. (1894). Osservazioni sismiche. Atti della R. Academia dei Fisiocritici, Siena 1894, (4) ***V****.*
Vicentini, G. (1894). Movimenti sismici. Ibid.
Cinelli, Modesto (1894). Sulle registrazione del microsismografo Vicentini avute a Siena dal 15 luglio al 31 ottobre 1894. Ibid.
Lussana, Silvio (1895). Osservazioni sismiche fatte col microsismografo Vicentini. Ibid., Siena 1895, ***VI****[with observations 11.1894–04.1895].*
Vicentini, G. (1896–1897). Sugli apparecchi impiegati nello studio delle ondulazioni del suolo. Ibid., Siena 1896–1897, ***VIII*** *[with observations 03.1894–09. 1896].*
From 02.1895 included in the national bulletin of Italy, see 107.
Rudolph (1903a, b).

121. Trieste

1899, 185 (1899-01-22–1899-03-25).
Mazelle, Eduard (1899). Die Einrichtung der seismischen Station in Triest und die vom Horizontalpendel aufgezeichneten

*Erdbebenstörungen von Ende August 1898 bis Ende Februar 1899. Mitteilungen der Erdbeben-Kommission der kaiserlichen Akademie der Wissenschaften in Wien **XI**. In: Sitz. Ber. der kaiserlichen Akademie der Wissenschaften in Wien **108**, mathematisch-naturwissenschaftliche Classe, Abth. 1, Heft V.*

*Mazelle, Eduard (1900). Erdbebenstörungen zu Triest, beobachtet am Rebeur-Ehlert'schen Horizontalpendel vom 1. März bis Ende Dezember 1899. Mitteilungen der Erdbeben-Kommission der kaiserlichen Akademie der Wissenschaften in Wien **XVII**. Ibid., **109** , Abth. 1, Heft II.*

*In Hamburg: Mazelle, Eduard: Erdbebenstörungen zu Triest, beobachtet am Rebeur-Ehlert'schen Horizontalpendel im Jahre 1900. Mitteilungen der Erdbeben-Kommission der kaiserlichen Akademie der Wissenschaften in Wien, Neue Folge **V**; Ibid., im Jahre 1901, Neue Folge **XI**.*

Mazelle, Eduard (1903–1906). Erdbebenstörungen zu Triest, beobachtet am Rebeur-Ehlert'schen Horizontalpendel im Jahre 1902. Mitteilungen der Erdbeben-Kommission der kaiserlichen Akademie der Wissenschaften in Wien, Neue Folge **XX**, 87 pp.; *Ibid.,* Jahre 1903, Neue Folge **XXX**, 37 pp.

At ISC: 01.1907–03.1912, 07., 08.1912, 12.1912–12.1918.

ISA: 1907, 1908 weekly listings.

Used in the BAASSC (1913–1917) 1913–1914.

NOAA: 10.1910–07.1914.

122. Valle di Pompei (Pompei)

In Hamburg: Bollettino Valle di Pompei 1908–1920.

At ISC: 01.–12.1909.

Used in the BAASSC (1913–1917) 1913–1915.

BGS: 1908–1908.

NOAA: 08.1910–08.1914, 01.–04.1915, 09.–12.1916, 01.1918–12.1920.

123. Venezia

Risultato delle Osservazioni sismografiche eseguite nell'osservatorio del Seminario Patriarcale di Venezia nell'anno 1907. R. Istituto Veneto di Scienze, Lettere et Arti, Venezia 1907–08 (1909).

Risultato delle Osservazioni sismografiche eseguite nell'osservatorio del Seminario Patriarcale di Venezia nell'anno 1908. Ibid., 1908–09 (1910).

In Hamburg: Osservatorio di Venezia, Bollettino mensile 1919–1925.

124. Japan

Central Meteorological Observatory stations in Shide Circular **1**, 27-28 (1900-02-17); **8**, 266-270 (1900-03-12–1902-11-21); **9**, 294-296 (1902-12-31–1903-04-19).

Central Meteorological Observatory: Annual Report of the Central Meteorological Observatory of Japan. Part II on the Earthquakes in the year 1900, Tokio, 1909.

Bulletin of the Imperial Earthquake Investigation Committee **1**, **No. 3**, Tokyo 1907.

Omori, F. (1908). List of stronger Japan earthquakes 1902–1907. Bulletin of the Imperial Earthquake Investigation Committee **2**, 58–88.

125. Kobe

Seismological Bulletin of the Kobe Observatory, 1919, 1920.

126. Mizusawa

Seismological Observations at Mizusawa for the period between 1902–1967. International Latitude Observatory of Mizusawa 1984, 380 pp.

127. Nagasaki

Seismic Bulletin in Nagasaki, 04.1913–12.1920.

128. Osaka

The Seismological Bulletin in Osaka from 1882 to 1929, the Osaka Meteorological Observatory 1931, 132 pp.

Used in the BAASSC (1913–1917) 1913–1915.

129. Tokyo, Central Meteorological Office (Hitotsubashi)

Chaplin, W.S. An examination of the earthquakes recorded at the Meteorological Observatory, Tokio. Trans. Asiatic Soc. of Japan **6**, part 4.

BAASRP **1897**, 133-137 (1895-05-06–1896-12-17); **1899**, 188–191 (1898-01-27–1899-01-29).

Shide Circular **1**, 29–30 (1899-01-29–1899-12-31); **3**, 90–92 (1900-01-15–1900-12-25); **5**, 141–144 (1901-01-01–1901-12-26); **7**, 223–225 (1902-01-01–1902-12-31).

1904 used in Rudolph (1907).

Tokyo, Japan, Seismic Bulletin of the Central Meteorological Observatory of Japan, 01.–48, 50.–52.1920.

Omori, F. (1903). Observations of earthquakes at Hitotsubashi (Tokyo), Earthquake Inv. Comm. **13**, 1, 143.

130. Tokyo, University (Hongo)

Shide Circular **1**, 24-26 (1899-07-24–1900-02-17); **7**, 218-223 (1900-02-25–1902-12-28); **9**, 293-294 (1902-12-31–1903-06-02); **11**, 344-345 (1903-07-09–1904-12-30); **15**, 144-147 (1905-01-13–1906-12-12); **20**, 319-321 (1907-01-02–1908-12-28); **24**, 91-93 (1909-01-28–1910-12-26).

Bulletin data from station Tokyo-Hongo in: Publications of the earthquake investigation committee in foreign languages **21**, Tokyo 1905, 102 pp.

NOAA: 1901–1920.

131. Wjernoje (Vernyï), Alma Ata

Bulletin of Imperial Russia 1906, 1907, see 168.

132. Inch'on (Tyosen, Zinsen, Chemulpo, Jinsen)

NOAA: 1918–1920.

133. Beirut

Shide Circular **11**, 339-340 (1904-01-20–1904-12-23); **12**, 19 (1904-12-31–1905-06-30); **13**, 48-49 (1905-07-06–1905-12-17); **14**, 89 (1906-01-06–1906-06-29); **15**, 134-135 (1906-07-06–1906-12-26); **17**, 208-209 (1907-01-01–1907-12-23); **18**, 237 (1908-01-08–1908-06-27); **19**, 269 (1908-07-13–1908-12-28); **20**, 308 (1909-01-05–1909-06-22); **21**, 362 (1909-06-27–1909-12-09); **22**, 403-404 (1910-01-16–1910-06-17); **23**, 39 (1910-01-16–1910-06-17); **26**, 204-205 (1911-03-02–1912-06-27); **27**, 265 (1912-07-07–1912-12-09).
Used in the BAASSC (1913–1917) 1914.

134. Ksara

Berloty, B. Bulletin sismique. Observatoire de Ksara 1910–1911.
At ISC: 01.1913–06.1914.
Annales de l'Observatoire de Ksara (Liban), Observations, Section séismologique [?–1921].
Used in the BAASSC (1913–1917) 1913–1914.
NOAA: 04.1911–12.1911, 01.1913–05.1914.

135. Valetta

Shide Circular **15**, 117-118 (1906-07-07–1906-12-22); **16**, 165-166 (1907-01-01–1907-06-25); **17**, 198 (1907-07-01–1907-12-30); **18**, 234 (1908-01-11–1908-06-27); **19**, 265-266 (1908-07-03–1908-12-30); **20**, 307-308 (1909-01-01–1909-06-27); **21**, 361-362 (1909-07-01–1909-12-29); **22**, 407-408 (1910-01-01–1910-06-28); **24**, 73-74 (1910-07-07–1911-06-28); **25**, 137-138 (1911-07-01–1911-12-31); **26**, 197 (1912-01-20– 1912-06-28); **27**, 259-260 (1912-07-07–1912-12-28).
Used in the BAASSC (1913–1917) 1914–1915.
NOAA: 07.–09.1910, 11.1910–12.1911, 03.–12.1912, 03.–05.1914, 07.1914–04.1916.

136. Mauritius (Pamplemousses)

BAASRP **1899**, 179–181 (1898-09-19–1899-03-12).
Shide Circular **1**, 16-18 (1898-09-19–1899-09-29); **3**, 77-83 (1899-10-19–1900-12-25); **4**, 112-113 (1901-01-07–1901-04-27); **6**, 164-166 (1901-05-07–1901- 09-30); **7**, 212 (1901-10-03–1901-12-31); **8**, 250 (1899-02-28–1899-12-25); **8**, 251-253 (1903-01-02–1903-06-25); **9**, 290 (1903-07-02–1903-09-08); **12**, 25-28 (1902-01-01–1902-12-16); **14**, 99-102 (1903-10-01–1905-12-19); **16**, 185-186 (1906-01-02–1906-12-19); **18**, 251-252 (1907-01-02–1907-12-15); **20**, 311-312 (1908-01-11–1908-12-23); **22**, 417-418 (1909-01-03–1909-12-23); **23**, 45 (1910-01-01–1910-06-30); **24**, 80-81 (1910-07-03–1910-12-30); **26**, 220-222 (1911-01-01–1911-12-31); **27**, 269-271 (1912-01-01–1912-12-24).
In Hamburg: Claxton, T. Results of the Observations at the Royal Alfred Observatory Mauritius, 1899–1909.
06.,07.1903 used in Strasbourg's "Von den Instrumenten . . ." and "Verzeichnis der im . . . ," see 60.
At ISC: 1896, 1920.
BGS: 1896–1920.
Used in the BAASSC (1913–1917) 1913–1915.

137. Mazatlán

See 140.

138. México

In Hamburg: México 1902–1912.
Aguilera, J.G. (1909). Catálogo de los temblores macroseísmos sentidos en la Republica Mexicana durante los años de 1904 á 1908. Parérgones del I. Geol. de México. ***II****, 10, 387–467.*
Boletín mensual del Observatorio Meteorológico Central de México, 01.1888–07.1916. Boletín mensual del Observatorio Meteorológico y Sysmológico Central de México, 08.1916–03.1918.
Boletín mensual del Servicio Meteorológico Mexicano, 04.1918–12.1920.

139. Oaxaca

See 140.

140. Tacubaya

ISA: 1906–11.1908.
Catálogo de los temblores (macroseismos) sentidos en la República Mexicana y microseismos registrados en la Estación Seismológica Central, Tacubaya, D.F., durante il segundo semestre de 1909. Paregones del Instit. Geológ. de Mexico. ***3 (1911)****, Nr. 8, 437–496.*
Catálogo de los temblores (macroseismos) sentidos en la República Mexicana y microseismos registrados en la Estación Seismológica Central, Tacubaya, D.F., durante el año de 1910. –Mircoseismos registrados en las Estaciones Seismológica de Mazatlán y Oaxaca, de Agosto á Diciembre de 1910. Ibid., ***3 (1911)****, Nr. 10, 527–587.*
NOAA: 1907–1912, 01., 07.–12.1917, 1920.

141. Yucatán

In Hamburg: Yucatán 1905–1913.

142. De Bilt

Seismische Registrierungen in De Bilt, **1,** 26 Juni–5 Oktober 1904, 16 April 1908–1913. Koninklijk Nederlandsch Meteorologisch Instituut No. 108, Utrecht, 24 + 94 pp., 1915.

Seismische Registrierungen in De Bilt, **2,** 1914. *Ibid*, 16 + 24 pp., 1916.

Seismische Registrierungen in De Bilt, **3**, mit einem Anhang: Die mikroseismische Bewegung April 1908–1915. *Ibid.*, 16 + 112 pp., 1917.

Seismische Registrierungen in De Bilt, **4** (1916), 6 + 102 pp., 1918; *Ibid.,* **5** (1917). 16 + 92 pp., 1920; *Ibid.,* **6** (1918), 8 + 84 pp., 1921; *Ibid.,* **7** (1919), 11 + 68 pp., 1922; *Ibid.,* **8** (1920), 11 + 62 pp., 1923.

143. Christchurch

Farr, C. Coleridge (1902). Records of Milne Seismograph No. 16, at Christchurch, from November 1901. Transactions of the New Zealand Institute **34 (1901)**, 604.

Farr, C. Coleridge (1903). Records of Milne Seismograph No. 16, at Christchurch, New Zealand. *Ibid.,* **35 (1902)**, 593–597.

Skey, H. F., and George Hogben (1905–1913). Records of the Milne Seismographs Nos. 16 and 20, taken at Christchurch and Wellington [data for 1903–1904]. Transactions of the New Zealand Institute, **37 (1904)**, 582-589; *Ibid.* [data for 1905], **38 (1905)**, 568-574; *Ibid.* [data for 1906–1911], **44 (1912)**, 441-457.

Shide Circular **6**, 169-171 (1901-11-23–1902-06-26); **7**, 218 (1902-07-06–1902-12-25); **9**, 292-293 (1903-01-04–1903-06-21); **10**, 312-313 (1903-07-02–1904-03-28); **11**, 341 (1904-04-01–1904-06-27); **12**, 20-21 (1904-07-12–1904-12-31); **13**, 58-59 (1905-01-07–1905-06-30); **14**, 98 (1905-12-28); **15**, 151-152 (1906-06-30); **16**, 182-184 (1907-06-27); **17**, 221 (1907-12-30); **18**, 250 (1908-06-18); **19**, 286 (1908-12-28); **20**, 335-336 (1909-01-01–1909-06-28); **21**, 373-374 (1909-07-01–1909-12-28); **22**, 415-416 (1910-01-10–1910-06-29); **27**, 278-279 (1911-04-06–1911-12-23).

BGS: New Zealand Journal of Science and Technology: 1915.

144. Wellington

Hogben, George (1902). Records of Milne Seismograph No. 20, at Wellington, from October 1900, to December 1901 (inclusive). Transactions of the New Zealand Institute **34 (1901)**, 598-606.

Hogben, George (1903). Records of Milne Seismograph No. 20, at Wellington, from January 1902, to December 1902 (inclusive). *Ibid.,* **35 (1902)**, 598-606.

1903–1911 see Christchurch, New Zealand (143).

Shide Circular **6**, 168-169 (1900-10-07–1902-06-26); **8**, 256-258 (1902-07-01–1902-12-31); **11**, 341 (1903-01-14–1903-06-10); **11**, 342 (1904-03-26–1904-12-11); **22**, 415 (1910-05-29–1910-06-29); **24**, 98 (1910-07-29–1911-05-05); **26**, 228 (1912-06-07–1912-10-17).

*Hector Observatory Bulletin, Wellington **36**, 1915.*

NOAA: 12.1920.

145. Bergen

See Norway (146) 1905–1920.

Bulletin Sismique de 1'Institut Geologique de Bergen Museum (1915-1922), several issues per year.

146. Norway

Thomassen, T. C. (1889). Berichte über die, wesentlich seit 1834, in Norwegen eingetroffenen Erdbeben. Bergens Museums Aarsberetning for 1888, No. 4, 52 pp.

Reusch, Hans (1888). Jordskjælv i Norge 1887. Forhandlinger i videnskabsselskabet i Christiania **8**, 10 pp.

Thomassen, T. C. (1891). Jordskjælv i Norge 1888–1890. Bergens Museums Aars beretning for 1890 No. 3, 56 pp.

Thomassen, T. C. (1894). Jordskjælv i Norge 1891–1893. Bergens Museums Aarbog for 1893, Afhandlinger og Aarsberetning No. 3, 57 pp.

Reusch, Hans (1895). Jordskjælv i 1894. In: Jordskjælv i Norge, Tre Afhandlinger, Forhandlinger i videnskabsselskabet i Christiania 1895 No. 10, 3-11 pp.

Rekstad, J. (1899). Jordskjælv i Norge aarene 1895–1898. Bergens Museums Aarbog 1899 No. 4, 40 pp.

Kolderup, Carl Frederik (1899–1913). Jordskjælv i Norge i [1899–1912]. Bergens Museums Aarbog 1899, No. 9, 46 pp.; *Ibid.,* 1900, No. 8, 12 pp.; *Ibid.,* 1901, No. 14, 21 pp.; *Ibid.,* 1902, No. 11, 35 pp.; *Ibid.,* 1903, No. 15, 25 pp.; *Ibid.,* 1905, No. 4, 35 pp.; *Ibid.,* 1906, No. 3, 37 pp.; *Ibid.,* 1907, No. 12, 49 pp.; *Ibid.,* 1908, No. 129, 49 pp.; *Ibid.,* 1909, No. 10, 33 pp.; *Ibid.,* 1910, No. 8, 22 pp.; *Ibid.,* 1911, No. 16, 21 pp.; *Ibid.,* 1912, No. 11, 38 pp.; *Ibid.,* 1913, No. 12, 19 pp.

Kolderup, Carl Frederik (1914–1922). Jordskjælv i Norge i [1913–1920], Fra Bergens Museums jordskjælvsstation 1914–1915, No. 16, 18 pp.; *Ibid.,* 1914–1915, No. 17, 11 pp.; *Ibid.,* 1917–1918, No. 10, 11 pp.; *Ibid.,* 1921–1922, No. 2, 26 pp.

147. Balboa Heights

03.1915–12.1920 included in US-WB.

148. Lima

Shide Circular **17**, 212-213 (1907-06-01–1907-12-30); **18**, 244-246 (1908-01-04–1908-06-28); **19**, 277 (1908-07-16–1908-12-13); **24**, 84 (1911-01-03–1911-06-18).

Used in the BAASSC (1913–1917) 1913–1914.

149. Manila

Masó, P. Miguel Saderra (1895). La Seismología en Filipinas–Datos para el estudio de terremotos del Archipiélago Filipino. Observatorio de Manila, Dirigido por los Padres de la Compañía Jesús. Tipo-Litográfico de Ramírez y Compañía, Manila 1895, 124 pp.

Manila Meteorological Observatory verified observations (1894), January to December.

Manila Observatory Monthly Bulletins (1897), January to December.

In Hamburg: Observatoria de Manila Boletín 1898–1901,

1904 used in Rudolph (1907).

07., 08., 10.1903, 01.–03.1904 used in Strasbourg's "Verzeichnis der im . . . ," see 60.

Algué, J. (1907–1909). Bulletins for the year [1906–1908]. Department of the Interior, Weather Bureau, Manila Central Observatory, Manila, 1907; *Ibid.,* 1908; *Ibid.,* 1909.

Manila Observatory–Philippines Island, Seismological Bulletin, 07.1910.

Manila Central Observatory, Bulletin, . . . , The Government of the Philippines Islands, Weather Review, 01.1919–12.1920 [monthly bulletins].

In Hamburg: Philippines Weather Bureau Bulletin 1901–1920.

At ISC: 08.–10.1909, 12.1909–06.1914, 06.–08.1915, 10.–11.1915, 01.–08.1916, 09.–12.1920.

Used in the BAASSC (1913–1917) 1913–1915.

150. Kraków (Krakau)

Rudzki, M.P. (1904–1909). Seismische Beobachtungen in [1903–1908]. Resultate der meteorologischen und seismologischen Beobachtungen an der k. k. Sternwarte in Krakau, 1903; *Ibid.,* in 1904; *Ibid*., in 1905; *Ibid.,* in 1906.; *Ibid*., in 1907; *Ibid*., in 1908; *Ibid*., in 1909.

Seismologische Beobachtungen in [1910–1913], an der k. k. Sternwarte Krakau.

Seismische Aufzeichnungen: 01.1913–06.1914.

At ISC: 01.1910–12.1917.

151. Krietern-Breslau (Wroclaw)

Seismische Berichte der Erdwarte zu Krietern, Kreis Breslau: handwritten weekly reports February 1–June 3, 1908.

Frölisch, O. (1910). Seismische Beobachtungen der Kgl. Erdbebenwarte in Krietern bei Breslau. August bis November 1910. Kohle und Flötz, Kattowitz, 1910.

Seismischer Bericht der Erdwarte Krietern Kreis Breslau, monthly reports: 09.1909–12.1910, 01.–02.1912.

Krietern-Breslau, Seismische Aufzeichnungen der Königlichen Erdwarte, monthly reports: 03.1912–08.1913, 11.1913–06.1914.

152. Lisboa (Lisbon)

Anais do Observatório Central Meteorológico do Infante D.Luis **58**, Part III, Observações Sismológicas 1920, 7 pp.

153. Ponta Delgada, St. Miguel, Açores

Shide Circular **9**, 284 (1903-07-27–1903-12-23); **10**, 307 (1904-01-20–1904-06-25); **11**, 330-331 (1904-07-04–1904-12-28); **12**, 12-13 (1905-01-19–1905-06-27); **13**, 39 (1905-07-06–1905-12-17); **14**, 75 (1906-01-21–1906-06-29); **15**, 120 (1906-07-13–1906-12-26); **16**, 168 (1907-01-02–1907-06-26); **17**, 200 (1907-08-05–1907-12-30); **18**, 238 (1908-02-14–1908-06-29); **19**, 270-271 (1908-07-08–1908-12-28); **20**, 309 (1909-01-15–1909-06-08); **21**, 359 (1909-07-06–1909-12-10); **22**, 400-401 (1910-01-01–1910-06-29); **23**, 33 (1910-07-20–1910-12-29); **24**, 69 (1911-01-01–1911-06-25); **25**, 132-133 (1911-07-01–1911-12-16); **26**, 193 (1912-01-24–1912-06-16); **27**, 256 (1912-07-01–1912- 12-09).

12.1903 used in Strasbourg's "Verzeichnis der im . . . ," see 60.

Used in the BAASSC (1913–1917) 1913–1915.

154. Portugal

Choffat, P. (1904). Les tremblements de terre de 1903 en Portugal. "Communicações" du Service Géologique Du Portugal ***5****. 1904.*

155. Vieques, Porto Rico (Puerto Rico)

In Hamburg: Results of Observations Vieques, Puerto Rico, 1903–1910, 1911–1918.

1904 in: *Reid, Harry Fielding. Records of Seismographs. Terrestrial Magnetism and Atmospheric Electricity, 1905.*

Shide Circular **13**, 50-52 (1904-07-10–1905-06-30).

ISA: 1906, 1907, 1908.

Hazard, Daniel L. (1912–1922). Results of Observations made at the United States Coast and Geodetic Survey Magnetic Observatory at Vieques, Porto Rico, 1909 and 1910, Department of Commerce and Labor, Coast and Geodetic Survey, pp. 92-93; *ibid.,* 1911 and 1912, pp. 100-102; *ibid.,* 1913 and 1914, pp. 100-102; *ibid.,* 1915 and 1916, pp. 98-99; *ibid.,* 1917 and 1918, pp. 100-103.

See US-WB, 1914–1920.

156. Bucharest (Bucarest, Bucuresti, Bucaresci)

03.1904 used in Strasbourg's "Verzeichnis der im . . . ," see 60.

Bulletin of Imperial Russia 1904, 1905, see 168.

Included in 157.

Bulletin Sismologique, Observatoire Astron. et Mét. de Bucarest 1910–1911.

At ISC: 05., 08., 11., 12.1903, 02., 04., 07., 08.1904, 01.–06.1906, 02.–08.1907, 01.1910–12.1911.

NOAA: 1910–1911.

157. Romania

Hepites, Ştefan C. (1893a). Registrul cutremurelor de pămâdi Românie (1839–1892). Analele Institutului Meteorologic al României, ***6****, B55-B68.*

Hepites, Ştefan C. (1893-1900). Registrul cutremurelor de pămâdi Românie [1893–1900]. Analele Institutului Meteorologic al României, ***8****, B13-B31; Ibid.,* ***10****, B58-B85; Ibid.,* ***11****, B205-B208;* ***12****, B224-B283; Ibid.,* ***13****, B203-B207;* ***14****, B233-B235; Ibid.,* ***15****, B110-B114; Ibid.,* ***16****, B123-B127.*

Hepites, Ştefan C. (1901). Arhiva seismică a României 1901. Ibid., ***17****, B317-B342.*

05., 06., 08., 09., 11., 12.1903, 03.1904 used in Strasbourg's "Von den Instrumenten . . . " and "Verzeichnis der im . . . ," see 60.

At KNMI: Hepites, Ştefan C. (1905). Materiale pentru sismografia României. XI seismele din Anul 1904. Anale le Academiei Române, Serie II, Tom. ***27****, 175-185.*

At KNMI: Hepites, Ştefan C. (1906). Materiale pentru sismografia României. XII seismele din Anul 1905. Ibid. Tom. ***28****, 333-337.*

At KNMI: Hepites, Ştefan C. (1907). Materiale pentru sismografia României. XIII seismele din Anul 1906. Ibid., Tom. ***29****, 172-216.*

In Hamburg: Hepites, Ştefan C. (1907). Arhiva seismică a României 1902–1906 (Archive sismique de Roumanie, Années

1902–1906). Analele Institutului Meteorologic al României ***18****, partea 2, Anul 1902, B189-B303.*
In Hamburg: Mouvements sismiques en Roumanie pendant la période 1907–1909. Bul. Mensuel. Observatoire Astron. et Mét. de Bucarest 1910, 21 pp.

158. Timisoara (Temesvar)

1906–1912 in Kövesligethy (1907, 1909, 1913), see 86.
BGS: 1907–1909.

159. Derbent

Included in: Seismische Monatsberichte des Physikalischen Observatoriums zu Tiflis, 03.1905–09.1909, see 64.
Bulletin of Imperial Russia 1906–1908, see 168.

160. Ekaterinburg (Ekaterinbourg, Jeckaterinburg, Sverdlovsk)

Bulletin of Imperial Russia 1907–1908, see 168.
Ezenedel'nyj bjulletin Sejsmiceskoj Stancii Pervogo Razrjada pri Observatorii v Ekaterinburge, 01.1913– 04.1914.
In Hamburg: Erdbebenberichte Ekaterinburg 1913–1914.
At ISC: 10.1913–06.1914.
Used in the BAASSC (1913–1917) 1914.
NOAA: 1913–1914.
BGS: 1913.

161. Irkutsk (Irkoutsk)

Shide Circular **5**, 141 (1901-12-05–1901-12-31); **7**, 214-216 (1902-01-01–1902-12-28); **8**, 246-247 (1903-01-02–1903-06-26); **9**, 289 (1903-07-08–1903-12-28); **10**, 318-319 (1904-01-07–1904-06-30); **11**, 346 (1904-07-01–1904-12-30); **13**, 44-45 (1905-04-03–1905-06-30); **15**, 136-139 (1905-07-06–1906-09-29); **17**, 203 (1906-10-02–1906-12-27); **18**, 240-242 (1907-01-01–1907-12-30); **19**, 275-276 (1908-01-11–1908-09-23); **20**, 318-319 (1908-10-01–1909-03-22).
Bulletin of Imperial Russia 1902–1908, see 168.
06., 12.1903 used in Strasbourg's "Von den Instrumenten . . . " and "Verzeichnis der im . . . ," see 60.
In Hamburg: Ikoutsk Bulletin Sismique 1902–1905, 1912–1914.
Station seismique de I-re classe d'Irkoutsk, Bulletin hebdomadaire, 12–27, 29–31, 34–41, 1912. *Ibid.,* 1–3, 5–16, 19, 22, 23, 1913.
At ISC: 01.1912–06.1914.
Used in the BAASSC (1913–1917) 1913–1915.
NOAA: 06.1912–01.1914, 05., 06., 1914.
BGS: 1913.

162. Kabansk (Kamensk)

Bulletin of Imperial Russia 1904–1908, see 168.

163. Königsberg (Kaliningrad)

Mitteilungen der Hauptstation für Erbebenforschung im Gr. Raum des Geologischen Instituts zu Königsberg Preußen. Monthly reports: 04.1912–05.1914.

164. Krasnojarsk (Krasnoïarsk)

Bulletin of Imperial Russia 1903–1906, see 168.

165. Maritouy (Marituj)

Bulletin of Imperial Russia, 11.–12.1908 (?), see 168.

166. Pavlovsk (Pawlowsk, near St. Petersburg)

Bulletin of Imperial Russia 1903, 1904, see 168.
NOAA: 01.1913–07.1914?

167. Pulkovo (Pulkovwa, near St. Petersburg)

Galitzin, Boris (1908). Seismometrische Beobachtungen in Pulkowa. Comptes Rendus des Séances de La Commission Sismique Permanente, **Tome 3**, Livraison I, 117-172.
Galitzin, Boris (1909). Seismometrische Beobachtungen in Pulkowa. Zweite Mitteilung. *Ibid.,* **Tome 3**, Livraison II, 5-119.
Wilip, J. Die zentrale seismische Station in Pulkova. *Ibid.,* **Tome 5**, Livraison II, 133-170 [data for 1911].
Wöchentliche Erdbebenberichte in Pulkovwa, 1–52, 1912. *Ibid.,* 1–11, 13–52, 1913. *Ibid.,* 1–7, 9–14, 17–25, 27–28, 1914.
In Hamburg: Wöchentliche Erdbebenberichte Pulko, 1913–1914.
At ISC: 01.1912–07.1914.
NOAA: 1912.
Used in the BAASSC (1913–1917) 1913–1914.

168. Russia

The Russian bulletins 1902–1907 were published as supplement to the "Comptes Rendus des Séances de La Commission Sismique Permanente" published by "Académie Impériale des Séances de Russie" and in addition as a quarterly journal with own page numbering.
Levitski, G. (1903a). Bulletin de la Commission Centrale Sismique Permanente Année 1902, Janvier–mars, 61 pp.; Avril–juin, 42 pp.; Juillet–septembre, 51 pp.; Octobre–décembre, 50 pp.
Levitski, G. (1903b). Bulletin de la Commission Centrale Sismique Permanente Année 1902, Janvier–juin. Comptes Rendus des Séances de La Commission Sismique Permanente, **Tome 1**, Livraison II, pp. 1-104; *ibid.,* Juillet–décembre, **Tome 1**, Livraison III, pp. 105-206.
Levitski, G. (1903–1904). Bulletin de la Commission Centrale Sismique Permanente Année 1903, Janvier–mars, 73 pp.; Avril–juin, 45 pp.; Juillet–septembre, 40 pp.; Octobre–décembre, 75 pp.
Levitski, G. (1904). Bulletin de la Commission Centrale Sismique Permanente Année 1903, Janvier–décembre. Comptes

Rendus des Séances de La Commission Sismique Permanente, Tome 2, Livraison I, pp. 1–235.

Levitski, G. (1905). Bulletin de la Commission Centrale Sismique Permanente Année 1904, Janvier–mars, 63 pp.; Avril–juin, 45 pp.; Juillet–septembre, 48 pp.; Octobre–décembre, 51 pp.

Levitski, G. (1906). Bulletin de la Commission Centrale Sismique Permanente Année 1904, Janvier–décembre. Comptes Rendus des Séances de La Commission Sismique Permanente, **Tome 2**, Livraison II, pp. 1-207.

Levitski, G. (1906–1907). Bulletin de la Commission Centrale Sismique Permanente Année 1905, Janvier–mars, 55 pp.; Avril–juin, 48 pp.; Juillet–septembre, 139 pp.; Octobre–décembre, 63 pp.

Levitski, G. (1907). Bulletin de la Commission Centrale Sismique Permanente Année 1905, Janvier–décembre. Comptes Rendus des Séances de La Commission Sismique Permanente, **Tome 2**, Livraison III, pp. 1-307.

Levitski, G. (1907–1908). Bulletin de la Commission Centrale Sismique Permanente Année 1906, Janvier–mars, 64 pp.; Avril–juin, 44 pp.; Juillet–septembre, 52 pp.; Octobre–décembre, 69 pp.

Levitski, G. (1908). Bulletin de la Commission Centrale Sismique Permanente Année 1906, Janvier–décembre. Comptes Rendus des Séances de La Commission Sismique Permanente, **Tome 3**, Livraison I, pp. 1-229.

Levitski, G. (1908–1909). Bulletin de la Commission Centrale Sismique Permanente Année 1907, Janvier–mars, 55 pp.; Avril–juin, 79 pp.; Juillet–septembre, 50 pp.; Octobre–décembre, 88 pp.

Levitski, G. (1909). Bulletin de la Commission Centrale Sismique Permanente Année 1907, Janvier–juin. Comptes Rendus des Séances de La Commission Sismique Permanente, **Tome 3**, Livraison II, pp. 1-135.

Levitski, G. (1910a). Bulletin de la Commission Centrale Sismique Permanente Année 1907, Juillet–décembre. Comptes Rendus des Séances de La Commission Sismique Permanente, **Tome 3**, Livraison II, pp. 105-206.

Levitski, G. (1910b). Bulletin de la Commission Centrale Sismique Permanente Année 1908, 112 pp. [but missing October–December].

Nikiforov, P. (1912). Bulletin de la Commission Centrale Sismique Permanente 1911, 26 + 26 pp.

Nikiforov, P. (1914). Bulletin de la Commission Centrale Sismique Permanente 1912, 26 + 52 pp.

BGS: 1907–1912.

169. Tchita (Tšita)

Bulletin of Imperial Russia 1904–1908, see 168.

170. Apia

At ISC: 01.–04.1905, 06.1905–12.1907, 04., 05., 07., 08.1907, 03.–09.1908, 11.1908–10.1909.

ISA: 1906, 1907, 1908 monthly.

Wegener, Kurt (1912). Die seismischen Registrierungen am Samoa-Observatorium der Kgl. Gesellschaft der Wissenschaften zu Göttingen in den Jahren 1909 und 1910. Nachrichten von der Königlichen Gesellschaft der Wissenschaften zu Göttingen, Mathematisch-physikalische Klasse, 267-384.

Weekly listings 01.–25., 31.–52.1910, 01.1911–September 1913.

At ISC: 03.1910–10.1911, 10., 11., 1912, 01., 05.–09. 1913.

NOAA: 01.1909–12.1913.

Angenheister, Gustav (1923). Liste der wichtigsten am Samoa-Observatorium 1913/20 registrierten Erdbeben. Nachrichten von der Königlichen Gesellschaft der Wissenschaften zu Göttingen, Mathematisch-physikalische Klasse aus dem Jahre 1922, 53-55.

171. Mahé

Shide Circular **24**, 84 (1911-06-01–1911-06-15); **25**, 147 (1911-07-04–1911-12-31); **26**, 219 (1912-01-04– 1912-02-21); **27**, 268 (1912-09-11–1912-12-05).

Used in the BAASSC (1913–1917) 1913–1914.

172. Hurbanovo (Ógyalla, Stará Dala)

1902–1912, all observations from Ógyalla were published together with the Hungarian observations, see 86.

05., 06., 08., 09., 11., 12.1903, 02., 03.1904 used in Strasbourg's "Von den Instrumenten . . . " and "Verzeichnis der im . . . ," see 60.

173. Ljubljana (Laibach)

*Seidl, Ferdinand (1898). Die Erderschütterungen Laibachs in den Jahren 1851 bis 1886, vorwiegend nach den handschriftlichen Aufzeichnungen K. Deschmanns. Mitteilungen der Erdbeben-Kommission **VI**. In: Sitz. Ber. Akademie der Wissenschaften Wien **107**, mathematisch-naturwissenschaftliche Klasse, Abt. 1, Heft VI.*

Belar, Albin (1897/1898). Ueber Erdbebenbeobachtung in alter und gegenwärtiger Zeit und die Erdbebenwarte in Laibach. Jahresbericht der k. k. Staats-Oberrealschule in Laibach 1897/1898, 43 pp.

ISA: 1906, 2907 + 1908 weekly listings.

Neuste Erdbebennachrichten 09.1901–12.1908 as published in "Die Erdbebenwarte" **1** (1901/1902)–**8** (1909), ***9*** *(1909/1910).* These monthly reports contain readings from the station in Laibach and from other stations as far as they reported to the institute in Laibach. The reported onsets were as far as possible associated to common events.

08., 09., 11.1903 used in Strasbourg's "Verzeichnis der im . . . ," see 60.

*In Hamburg: Achitsch, A. Seismische Aufzeichnungen in Laibach, gewonnen an der Erdbebenwarte im Jahre 1913. Mitteilungen der Erdbeben-Kommission der Kaiserlichen Akademie der Wissenschaften in Wien. Neue Folge **48**.*

Wöchentliche Erdbebenberichte, No. 41, 1910–No. 24, 1914.

At ISC: 01.1907–01.1912.

174. Cape of Good Hope (Capetown)

BAASRP **1899**, 182 (1899-07-14–1899-07-31).

Shide Circular **1**, 22-24 (1899-08-04–1900-02-24); **2**, 43 (1900-03-06–1900-06-21); **3**, 76-77 (1900-07-29–1900-12-25); **4**, 107 (1901-01-08–1901-06-17); **5**, 133-134 (1901-08-09–1902-01-01); **6**, 157-158 (1902-01-12–1902-06-11); **7**, 206 (1902-06-11–1902-12-13); **8**, 239-240 (1903-01-03–1903-06-29); **9**, 284-285 (1903-07-01–1903-12-23); **10**, 308 (1904-01-02–1904-06- 29); **11**, 331-332 (1904-07-01–1904-12-22); **12**, 13 (1905-01-01–1905-06-30); **13**, 42 (1905-07-06–1905-11-08); **14**, 74 (1906-01-21–1906-06-24); **15**, 119 (1906-07-06–1906-12-26); **16**, 167 (1907-01-01–1907-06-27); **17**, 198-199 (1907-07-01–1907-12-30); **18**, 238-239 (1908-01-11–1908-06-03); **19**, 271-272 (1908-07-28–1908-12-30); **20**, 309-311 (1909-01-02–1909-06-30); **21**, 365-366 (1909-07-06–1909-12-20); **22**, 408–409 (1910-01-01–1910-06-25); **23**, 33-34 (1910-07-07–1910-12-30); **24**, 82 (1911-01-01–1911-06-28); **25**, 144-145 (1911-07-01–1911-12-31); **26**, 206-207 (1912-01-01–1912-06-28); **27**, 271-272 (1912-07-07–1912-12-09).

06., 12.1903 used in Strasbourg's "Von den Instrumenten . . . " and "Verzeichnis der im . . . ," see 60.

Used in the BAASSC (1913–1917) 1913–1915.

175. Cartuja (Granada)

Sección seísmica, Enero 1903, Observatorio astronómico, geodinámico y meteorológico de Granada, Enero 1903, 29.

Sección geodinámica, Febrero 1903, *Ibid.,* Febrero 1903, 3-5.

Sección sísmica, Marzo 1903–Diciembre 1903, *Ibid.,* monthly reports.

Sección sísmica, Enero 1904–Diciembre 1904, *Ibid.,* monthly reports.

03.1904 used in Strasbourg's "Verzeichnis der im . . . ," see 60.

Sismogramas obtenidos en el año 1905. Sección sísmica, Año III Enero 1905, Observatorio astronómico, geodinámico y meteorológico de Granada, Enero 1905, 7-10.

Sección sísmica, Enero 1906–Diciembre 1906, *Ibid.,* monthly reports, missing November.

Sección sísmica, Enero 1907–Diciembre 1907, *Ibid.,* monthly reports, missing March.

Boletín mensual de la estación sismológica del observatorio de Cartuja (Granada). 07.1908–09.1916.

Navarro-Neumann, M.S. (1907). Os terremotos observados san o auxilio de instrumentos. Brotéria, Rev. Bimensal ***6****, 217-250.*

Navarro-Neumann, M.S. (1908–1914). Bulletin Sismique de Cartuja. Bulletin de la Société belge d'Astronomie, [Météorologie, Géodésie et Physique de Globe] **13**, 81-84, 121-124, 160-163, 206-208, 240-242, 330-333, 378-381, 416-418; *Ibid.,* **14**, 37-38, 134-138, 175-176, 212-214, 255-257, 335-337, 413-416, 483-486, 529-531; *Ibid.,* **15**, 37-38, 88-90, 138-140, 181-182, 221-223, 258-260, 302-305, 350-352, 376-378, 435-437, 470-472, 512-514; *Ibid.,* **16**, 33-35, 77-80, 127-128, 174-176, 199-201, 234-235, 271-274, 271-274, 313-317, 358-359, 401-403, 432-435; *Ibid.,* **17**, 32-34, 76-78, 118-119, 162-163, 245-250, 282-286, 310-314, 356-357, 399-400; *Ibid.,* **18**, 30-31, 105-109, 141-142, 174-175, 196-197, 252-253, 276-277, 314-317, 346-348, 377-379; *Ibid.,* **19**, readings until April or May.

Used in the BAASSC (1913–1917) 1913–1915.

NOAA: 11.1908–12.1915, 01.–03., 06.–09.1916.

176. Ebro (Tortosa)

Observatorio del Ebro, Observaciones seismograficas: monthly reports 04.–11.1905, 01.–12.1906, 02.–12.1907.

Observatorio del Ebro, handwritten bulletin book: 01.–10.1906, 04., 05.1907, 01.–10.1908, 02., 03., 05., 06.1909.

Boletin Mensual del Observatorio del Ebro, Observatorio de Física Cósmica del Ebro (Bulletin de L'Observatoire de L'Ebre), Vol. I., No 1–12, 1910. *Ibid.,* Vol. II., No 1–12, 1911. *Ibid.,* Vol. III., No 1–12, 1912. *Ibid.,* , Vol. IV., No 1–9, 1913.

In Hamburg: Boletín mensual de Observatorio del Ebro, 1913–1920.

177. Fabra (Barcelona)

Comas Sola, José (1908). Estadistica sismologica de 1907, en Barcelona, Memorias de la Real Academia de Ciencias y Artes de Barcelona, Vol. 5, 505-509.

Comas Sola, José (1908). Observaciones sísmicas durante el Año 1907, *Ibid.,* Tercera época1**156** Vol. 6 Núm. 31, 510-518.

Comas Sola, José (1909). Observaciones sísmicas efectuadas durante el Año 1908, *Ibid.,* Tercera época1**171** Vol. 7 Núm. 13, 532-543.

Comas Sola, José (1910–1912). Observaciones sísmicas durante el Año [1909–1911], *Ibid.,* Tercera época1**190** Vol. 8 Núm. 15, 286-298; *Ibid.,* Tercera época1 **205** Vol. 8 Núm. 30, 545-557; *Ibid.,* Vol. 10 Núm. 12, 235-249.

Comas Sola, José (1913). Resumen Sísmico de 1912 y de 1913 (basta el 17 de abril de este último año), *Ibid.,* Tercera época **1234** Vol. 10 Núm. 27, 556-569.

Comas Sola, José (1915–1921). Observaciones sísmicas durante el Año [1914–1920], Memorias de la Real Academia de Ciencias y Artes de Barcelona.

178. Puerto Orotava (Puerto de la Cruz), Tenerife

Rebeur-Paschwitz (1892, 1895).

179. Río Tinto

Shide Circular **24**, 72-73 (1911-01-01–1911-06-17); **25**, 136-137 (1911-07-04–1911-12-31); **26**, 193-194 (1912-01-04–1912-06-28); **27**, 259 (1912-07-07– 1912-12-24).

Used in the BAASSC (1913–1917) 1913–1915

180. San Fernando

Observaciones séismicas, Años 1898 y 1899. Anales del Instituto y Observatorio de Marina en San Fernando, Sección 2.ª, Observaciones Meteorológicas, Magnéticas y Séismicas Año 1899, San Fernando 1900, 1-2.

Observaciones séismicas, Año 1900, *Ibid.,* San Fernando 1901, 1-2.

Observaciones séismicas, Año 1901, *Ibid.,* San Fernando 1902, 151-152.

Observaciones séismicas, Año 1902, *Ibid.,* San Fernando 1903, 151-153.

Observaciones séismicas, Año 1903, *Ibid.,* San Fernando 1904, 151-153.

Observaciones séismicas, Año 1904, *Ibid.,* San Fernando 1905, 151-155.

05.–11.1903, 01.–03.1904 used in Strasbourg's "Von den Instrumenten . . . " and "Verzeichnis der im . . . ," see 60.

Observaciones séismicas, Año [1905–1920]. Anales del Instituto y Observatorio de Marina en San Fernando, Sección 2.ª, Observaciones Meteorológicas, Magnéticas y Séismicas Año [1905–1920], San Fernando [1906–1921].

BAASRP **1899**, 174 (1898-02-18–1899-07-17).

Shide Circular **1**, 14 (1899-07-17–1899-12-31); **2**, 40 (1900-01-05–1900-06-21); **3**, 74-75 (1900-07-29–1900-12-25); **4**, 106 (1901-01-07–1901-06-24); **5**, 131-132 (1901-08-06–1901-12-31); **6**, 155 (1902-01-01–1902-06-22); **7**, 205 (1902-07-05–1902-12-30); **8**, 238 (1903-01-05–1903-06-10); **9**, 283 (1903-07-02–1903-12-29); **10**, 306-307 (1904-01-20–1904-06-27); **11**, 329-330 (1904-07-01–1904-12-31); **12**, 10-12 (1905-01-01–1905-06-30); **13**, 38 (1905-07-06–1905-12-29); **14**, 73-74 (1906-01-06–1906-06-30); **15**, 115-117 (1906-07-20–1906-12-29); **16**, 163-165 (1907-01-01–1907-06-30); **17**, 197 (1907-07-01–1907-12-30); **18**, 233 (1908-01-11–1908-06-27); **19**, 265 (1908-07-08–1908-12-29); **20**, 306 (1909-01-05–1909-06-11); **21**, 358 (1909-07-07–1909-12-29); **22**, 398-400 (1910-01-01–1910-06-30); **23**, 28-29 (1910-07-03–1910-12-29); **24**, 70-72 (1911-01-01–1911-06-25); **25**, 133-136 (1911-07-01–1911-12-31); **26**, 194-197 (1912-01-04–1912-06-29); **27**, 257-258 (1912-07-07–1912-12-29).

181. Spain

In Hamburg: Rodríguez, José Galbis (1932). Catálogo sísmico de la zona comprendida entre los meridianos 5° E. Y 20° W. De Greenwich y los paralelos 45° y 25° N. Velasco, Madrid 1932, 10 + 807 pp.

182. Urania

Bulletin from 06.–12.1913, 02.–07.1914 published in: Servicio Sismologico de la Sociedad Astronomica de España y America. Boletin de la Sociedad Astronomica de España y America ***III****, 101-102, 117-118, 135-136, 150, 160. Ibid.,* ***IV****, 30-31, 79-80, 95-96, 110.*

183. Colombo

Shide Circular, **16**, 170 (1906-01-31–1906-12-29); **21**, 368-369 (1909-07-07–1909-12-16); **22**, 410-411 (1910-01-01–1910-06-29); **23**, 38 (1910-06-30–1910-12-30); **24**, 89-90 (1911-01-01–1911-06-17); **25**, 155 (1911-07-04–1911-12-31); **26**, 219 (1912-01-04– 1912-06-27); **27**, 267-268 (1912-07-07–1912-12-28).

Used in the BAASSC (1913–1917) 1913–1915.

184. Uppsala (Upsala)

Åkerblom, Filip (1906). Seismische Registrierungen in Upsala Oktober 1904–Mai 1905. Nachrichten von der Königlichen Gesellschaft der Wissenschaften zu Göttingen, Mathematisch-physikalische Klasse, 125-140.

Åkerblom, Filip (1913). Observations séismographiques faites à l'observatoire météorologique d'Upsala de juillet à décembre 1906, 18 pp.

Koraen, Tage (1914). Observations séismographiques faites à l'observatoire météorologique d'Upsala de janvier 1907 à août 1912, 122 pp.

Landin, Sven (1917). Observations séismographiques faites à l'observatoire météorologique d'Upsala de septembre 1912 à avril 1917, 72 pp.

Upsala 1917–1920.

185. Switzerland

Heim, Albert (1881). Die Schweizerischen Erdbeben vom November 1879 bis Ende 1880, Jahrbuch des Tellurischen Observatoriums zu Bern **1881**, 26 pp.

Die Erdbeben der Schweiz in den Jahren 1888–1891. Annalen der Schweizerischen Meteorologischen Zentralanstalt ***1891.***

Früh, J. (1893). Die Erdbeben der Schweiz im Jahre 1892. Annalen der Schweizerischen Meteorologischen Zentralanstalt **1892**, 16 pp.

Früh, J. (1894). Die Erdbeben der Schweiz im Jahre 1893. *Ibid.,* **1893**, 6 pp.

Früh, J. (1895). Die Erdbeben der Schweiz im Jahre 1894. Ibid., ***1894.***

Früh, J. (1896–1905). Die Erdbeben der Schweiz im Jahre [1895–1904]. *Ibid.,* **1895**, 14 pp.; *Ibid.,* **1866**, 18 pp.; *Ibid.,* **1897**, 9 pp.; *Ibid.,* **1898**, 13 pp.; *Ibid.,* **1899**, 3 pp.; *Ibid.,* **1900**, 3 pp.; *Ibid.,* **1901**, 8 pp.; *Ibid.,* **1902**, 3 pp.; *Ibid.,* **1903**, 4 pp.; *Ibid.,* **1904**, 4 pp.

Quervain, A. de (1906–1909). Die Erdbeben der Schweiz im Jahre [1905–1907]. *Ibid.,* **1905**, 13 pp.; *Ibid.,* **1906**, 5 pp.; *Ibid.,* **1907**, 7 pp.

Quervain, A. de (1909). Die Erdbeben der Schweiz im Jahre 1908 und die Schallverbreitung der Dynamitexplosion an der Jungfraubahn, 15. November. *Ibid.,* **1908**, 11 pp.

Quervain, A. de (1910–1913). Die Erdbeben der Schweiz im Jahre [1909–1913]. *Ibid.,* **1909**, 7 pp.; *Ibid.,* **1910**, 13 pp.; *Ibid.,* **1911**, 8 pp.

Quervain, A. de (1913). Die Erdbeben der Schweiz im Jahre 1912, Die im Jahre 1912 auf der Erdbebenwarte bei Zürich registrierten Nahebeben, Ueber Herdtiefenbestimmung aus herdnahen Stationen und die dabei erforderliche und erreichbare Zeitgenauigkeit. *Ibid.,* **1912**, 12 pp.

Jahresbericht des Schweizerischen Erdbebendienstes, 1913–1920. *Ibid.*

186. Zürich

See Switzerland 185.

187. Port of Spain (St. Clair)

Shide Circular **4**, 111 (1901-01-07–1901-06-25); **5**, 140-141 (1901-07-01–1901-12-31); **6**, 166 (1902-01-01–1902-06-28); **7**, 212-213 (1902-07-01–1902-12-18); **8**, 253-254 (1903-01-03–1903-06-20); **9**, 291 (1903-07-01–1903-12-23); **10**, 312 (1904-01-12–1904-06-26); **11**, 343 (1904-07-24–1904-12-21); **12**, 21 (1905-03-17–1905-06-25); **13**, 50 (1905-07-09–

1905-12-28); **14**, 90-91 (1906-01-25–1906-06-30); **15**, 139-140 (1906-08-06–1906-12-26); **16**, 174 (1907-02-12–1907-06-13); **17**, 209 (1907-10-16–1907-12-30); **18**, 244 (1908-01-20–1908-05-31); **19**, 276-277 (1908-07-08–1908-09-12); **21**, 361 (1909-06-07–1909-06-08); **26**, 210 (1909-06-08–1909-06-18).

Seismograph records, Bull. Dept. Agriculture VIII, 64-67, Governm. Print. Office, Trinidad, 1908.

06., 12.1903 used in Strasbourg's "Von den Instrumenten . . . " and "Verzeichnis der im . . . ," see 60.

188. Harpoot (Harput, Kharput, Kharpert, Elâzig)

Riggs, H.H.: Euphrat College, monthly reports 1907, 1908, 1909.

189. Istanbul (Constantinopel)

See Turkey 190.

190. Turkey

Agamennone, G. (1895). Liste des tremblements de terre qui ont eu lieu dans l'Empire Ottoman pendant l'année 1894. Bulletin météorologique et séismique de l'Ob- servatoire Impérial de Constantinople année: 1894, 1-6.

Agamennone, G. (1896). Liste des tremblements de terre qui ont eu lieu en Orient et en particulier dans l'Empire Ottoman. L'activité sismique en Orient et en particulier dans l'Empire Ottoman pendant l'année 1895. *Ibid.,* 1-68.

Agamennone, G. (1896). Liste des tremblements de terre qui ont eu lieu en Orient et en particulier dans l'Empire Ottoman. L'activité sismique en Orient et en particulier dans l'Empire Ottoman pendant l'année 1896. *Ibid.,* 1-26 (January–April 1896).

Salih Zéky (1897). Liste des tremblements de terre observés en Orient et en particulier dans l'Empire Ottoman pendant le mois des Janvier et Février 1897. *Ibid.,* Janvier et Février 1897, 1-3.

Salih Zéky (1897). Liste des tremblements de terre observés en Orient et en particulier dans l'Empire Ottoman pendant le mois des Mars et Avril 1897. *Ibid.,* Mars et Avril 1897, 1-2.

191. Charkow (Kharkov)

*Levitski, G.V. (1894). Quelques résultats d'observations effectuées á l'Observatoire Astronomique de l'Université de Kharkov avec les pendules Rebeur-Paschwitz. Comm. Soc. Math. Kharkov **4**, 5-6, 206-208.*

Lewitzky, G. (1896). Ergebnisse der auf der Charkower Universitätssternwarte mit dem v. Rebeur'schen Horizontalpendel angestellten Beobachtungen. Charkow, 1896, 63 pp.

Struve, L.: Ergebnisse der auf der Charkower Universitätssternwarte mit dem v. Rebeur'schen Horizontalpendel angestellten Beobachtungen. Charkow, 28 pp.

Observations used in 1895 as reference in the national bulletin of Italy, see 107.

1893–1897 used in Rudolph (1904).

Rebeur-Paschwitz (1895).

Rudolph (1903a, b).

Kudrewitsch, B. (1911). Resultate aus den im Jahre 1909 angestellten Beobachtungen an den v. Rebeur- Paschwitzchen Horizontalpendeln der Charkower Sternwarte. Publikation der Charkower Universtitätssternwarte 1911, Nr. 6, 1-35.

192. Czernovitz (Czernowitz, Tschernowzy)

At ISC: 01.1913–07.1914.

Used in the BAASSC (1913–1917) 1913–1914.

193. Lwiw (Lemberg, Lwów)

*In Hamburg: Láska, W. Bericht über die Erdbebenbeobachtungen in Lemberg. Mitteilungen der Erdbeben-Kommission der kaiserlichen Akademie der Wissenschaften in Wien, Neue Folge **I**.*

*In Hamburg: Láska, W. Die Erdbeben Polens. Des historischen Teiles 1. Abteilung. Ibid., Neue Folge **VIII**.*

*In Hamburg: Láska, W. Bericht über die Erdbeben- Beobachtungen in Lemberg während des Jahres 1901. Ibid., Neue Folge **IX**.*

Láska, W. (1903). Bericht über die seismologischen Aufzeichnungen des Jahres 1902 in Lemberg. *Ibid.*, Neue Folge **XXII**, 37 pp.

*In Hamburg: Láska, W. Jahresbericht des Geodynamischen Observatoriums zu Lemberg für das Jahr 1903, nebst Nachträgen zum Katalog der polnischen Erdbeben. Ibid., Neue Folge **XXVIII**.*

Wöchentliche Erdbebenberichte, Seismisches Observatorium Lemberg, k.k. Technische Hochschule, 34.1910–31.1918.

Wöchentliche Erdbebenberichte, Seismisches Observatorium Lemberg (Lwów), Technische Hochschule, 32.1918–52.1920.

194. Makejewka (Makejevka, Makeyevka)

At ISC: 03.1912–11.1913.

Used in the BAASSC (1913–1917) 1913.

195. Nicolajew (Nikolajew, Nikolaev)

Rebeur-Paschwitz (1895).

1893–1897 used in Rudolph (1904).

Rudolph (1903a, b).

Kortazzi, J. (1894). Account of observations made with the horizontal pendulum at Nicolajew, Report of 64th Meeting, British Association of the Advancement of Science, 155-158.

Observations used in 1895 as reference in the national bulletin of Italy, see 107.

*Kortatsii I.E. (1895). Observations à l'aide du pendule horizontal Rebeur-Paschwitz à l'Observatoire de Nicolaev. Soc. Astron. Russe Publ. **4**, 24-25.*

BAASRP **1897**, 169 (1896-06-14–1897-03-15); **1898**, 196 (1897-05-05–1898-01-29); **1899**, 183-184 (1898-03-06–1899-03-12).

Kortazzi, J. (1900). Les perturbations du pendule horizontal à Nicolajew en 1897, 1898 et 1899. Beiträge zur Geophysik **4**, 383-405.

Kortazzi, J. (1903). Les perturbations du pendule horizontal à Nicolajew en 1900. Beiträge zur Geophysik **5**, 663-666.
Bulletin of Imperial Russia 1902, 1904–1908, see 168.

196. Uschhorod (Uschgorod, Ungvar, Uzhorod)

1911–1912 in Kövesligethy (1913), see 86.

197. United Kingdom

See 210.

198. Ascension Island

Shide Circular **23**, 34-35 (1910-11-09–1911-03-10); **24**, 83 (1911-03-15–1911-06-25); **25**, 145 (1911-07-06–1911-12-16); **26**, 205 (1912-01-31–1912-06-08); **27**, 272 (1912-07-07–1912-12-09).
Used in the BAASSC (1913–1917) 1913–1914.

199. Bidston (Liverpool)

BAASRP **1898**, 195 (1897-09-06–1898-03-28); **1899**, 185-186 (1898-03-28–1899-03-02).
Shide Circular **4**, 98-99 (1901-01-08–1901-06-24); **5**, 123-124 (1901-06-30–1902-01-01); **6**, 150-151 (1902-01-01–1902-06-26); **7**, 199-200 (1902-07-01–1902- 12-28); **8**, 234-235 (1903-01-01–1903-06-25); **9**, 276-277 (1903-07-02–1903-12-31); **10**, 303 (1904-01-02–1904-06-27), **11**, 327 (1904-07-01–1904-12-28); **12**, 8 (1905-01-08–1905-06-30); **13**, 35 (1905-07-01–1905-12-31); **14**, 69-70 (1906-01-02–1906-06-27); **15**, 112-113 (1906-07-04–1906-12-26); **16**, 159-160 (1907-01-01–1907-06-30); **17**, 194 (1907-07-01–1907-12-30); **18**, 230 (1908-01-04–1908-06-28); **19**, 260-261 (1908-06-30–1908-12-30); **20**, 298-300 (1909-01-03–1909-06-30); **21**, 346-348 (1909-07-01–1909-12-30); **22**, 383-384 (1910-01-01–1910-07-10); **23**, 12-13 (1910-07-12–1910-12-30); **24**, 56-58 (1911-01-01–1911-06-28); **25**, 113-114 (1911-07-03–1911-12-31); **26**, 174-175 (1912-01-04–1912-06-29); **27**, 245-247 (1912-07-01–1912-12-29).
06., 12.1903 used in Strasbourg's "Von den Instrumenten . . ." and "Verzeichnis der im . . . ," see 60.
Used in the BAASSC (1913–1917) 1913–1915.
BGS: 1901–1919.

200. Duce (Aberdeen)

Used in the BAASSC (1913–1917) 1914–1915.

201. Blackford Hill (Edinburgh)

BAASRP **1897**, 168 (1896-08-25–1897-03-18); **1898**, 194 (1897-06-03–1898-01-29); **1899**, 186 (1898-03-05–1898-04-15).
Shide Circular **4**, 99-100 (1900-12-20–1901-06-24); **5**, 124-126 (1901-07-18–1901-12-31); **6**, 151-152 (1902-01-01–1902-06-22); **7**, 200-201 (1902-07-05–1902-09-28); **8**, 235-236 (1903-01-04–1903-06-25); **9**, 277-278 (1903-07-04–1903-12-28); **10**, 304 (1904-01-07–1904-06-27); **11**, 328 (1904-07-10–1904-12-21); **12**, 9 (1905-01-06–1905-06-30); **13**, 36 (1905-07-06–1905-12-31); **14**, 70-71 (1906-01-01–1906-06-26); **15**, 113-114 (1906-07-10–1906-12-26); **16**, 161 (1907-01-01–1907-06-26); **17**, 195 (1907-07-01–1907-12-30); **18**, 231 (1908-01-08–1908-06-27); **19**, 261-262 (1908-07-01–1908-12-28); **20**, 300-302 (1909-01-03–1909-06-30); **21**, 348-350 (1909-07-01–1909-12-31); **22**, 365-387 (1910-01-01–1910-06-30); **23**, 21-24 (1910-07-02–1910-12-30); **24**, 64-66 (1911-01-01–1911-06-28); **25**, 117-120 (1911-07-01–1911-12-31); **26**, 189-192 (1912-01-03–1912-06-29); **27**, 252-254 (1912-07-01–1912-12-29).
06., 12.1903 used in Strasbourg's "Von den Instrumenten . . ." and "Verzeichnis der im . . . ," see 60.
Used in the BAASSC (1913–1917) 1913–1915.

202. Eskdalemuir

Shide Circular **21**, 353 (1909-07-07–1909-12-10); **22**, 389-390 (1910-01-01–1910-06-29); **23**, 26-27 (1910-07-07–1910-12-30); **24**, 68-69 (1911-01-01–1911-06-21); **25**, 124-127 (1911-07-01–1911-12-31); **26**, 183-187 (1912-01-03–1912-06-29); **27**, 247-251 (1912-07-01–1912-12-28).
Used in the BAASSC (1913–1917) 1913–1915.
BGS: 10.1913–08.1916, 01.–10.1920.
Annual report in Meterorological Year Book, pt. 3, no. 2.

203. Haslemere (Hazlemere, Frensham Hall Observatory)

Shide Circular **16**, 162-163 (1906-12-17–1907-06-25); **17**, 196 (1907-07-01–1907-12-15); **18**, 232 (1908-01-03–1908-06-23); **19**, 264 (1908-07-03–1908-12-29); **20**, 305 (1909-01-03–1909-06-28); **21**, 356-357 (1909-07-05–1909-12-23); **22**, 397-398 (1910-01-01–1910-06-29); **23**, 19-21 (1910-07-03–1910-12-30); **24**, 63-64 (1911-01-01–1911-06-28); **25**, 122-124 (1911-07-01–1911-12-31); **26**, 181-183 (1912-01-04–1912-06-29); **27**, 241-243 (1912-07-01–1912-12-31).
Used in the BAASSC (1913–1917) 1913–1915.

204. Kew (London)

BAASRP **1899**, 166-170 (1898-02-27–1899-04-03).
Shide Circular **1**, 4-11 (1899-04-04–1899-12-31); **2**, 33-35 (1900-01-05–1900-06-30); **3**, 64-65 (1900-07-01–1900-12-25); **4**, 96-97 (1901-01-07–1901-06-24); **5**, 121-122 (1901-07-07–1901-12-31); **6**, 149 (1902-01-01–1902-06-11); **7**, 197-198 (1902-06-16–1902-12-28); **8**, 232-233 (1903-01-04–1903-06-29); **9**, 275-276 (1903-07-04–1903-12-28); **10**, 302 (1904-01-07–1904-06-27); **11**, 326 (1904-07-01–1904-12-28); **12**, 6-7 (1905-01-03–1905-06-30); **13**, 33-34 (1905-07-03–1905-12-17); **14**, 67-68 (1906-01-21–1906-06-27); **15**, 110-111 (1906-07-08–1906-12-26); **16**, 158-159 (1907-01-02–1907-06-25); **17**, 193 (1907-07-04–1907-12-30); **18**, 229 (1908-01-13–1908-06-27); **19**, 259 (1908-07-01–1908-12-28); **20**, 297-298 (1909-01-02–1909-06-27); **21**, 345-346 (1909-07-03–1909-12-22); **22**, 382-383 (1910-01-01–1910-06-30); **23**, 11-12 (1910-07-03–1910-12-30); **24**, 55-56 (1911-01-01–1911-06-28); **25**, 111-112 (1911-07-01–1911-12-31); **26**, 172-173 (1912-01-04–1912-06-29); **27**, 237-239 (1912-07-07–1912-12-29).

06., 12.1903 used in Strasbourg's "Von den Instrumenten . . . " and "Verzeichnis der im . . . ," see 60.
Used in the BAASSC (1913–1917) 1913–1915.
Original observatory handwritten bulletins held at BGS: 04.1899–1912, 1914.

205. Newport, Gwent

Used in the BAASSC (1913–1917) 1914–1915.

206. Paisley (Coats Observatory)

Shide Circular **7**, 201-202 (1902-01-01–1902-12-30); **9**, 278-280 (1903-01-04–1903-12-31); **10**, 304-305 (1904-01-01–1904-06-27); **11**, 329 (1904-07-01–1904-12-20); **12**, 10 (1905-01-20–1905-06-30); **13**, 37-38 (1905-07-02–1905-12-17); **14**, 71-72 (1906-01-01–1906-06-24); **15**, 114-115 (1906-07-08–1906-12-23); **16**, 162 (1907-01-01–1907-06-13); **17**, 195 (1907-07-04–1907-10-23); **18**, 231 (1908-01-01–1908-06-03); **19**, 262-263 (1908-07-08–1908-12-29); **20**, 302-305 (1909-01-03–1909-06-30); **21**, 350-352 (1909-07-01–1909-12-31); **22**, 387-389 (1910-01-01–1910-06-30); **23**, 24-26 (1910-07-03–1910-12-31); **24**, 66-67 (1911-01-01–1911-06-28); **25**, 127-129 (1911-07-04–1911-12-31); **26**, 187-189 (1912-01-04–1912-06-29); **27**, 254-255 (1912-07-03–1912-12-28).
12.1903 used in Strasbourg's "Verzeichnis der im . . . ," see 60.
Used in the BAASSC (1913–1917) 1913.
BGS: 1902–02.1909.

207. Shide, Isle of Wight

BAASRP **1896**, 184-196 (1895-08-19–1896-03-22); **1897**, 149-151 (1896-06-14–1897-03-18); **1898**, 191-193 (1897-03-23–1898-02-16); **1899**, 162-166 (1898-02-27–1899-04-03).
Shide Circular **1**, 2-4 (1899-04-04–1899-12-31); **2**, 32-33 (1900-01-04–1900-06-28); **3**, 62-63 (1900-07-02–1900-12-25); **4**, 94-95 (1901-01-07–1901-06-24); **5**, 116-120 (1901-07-02–1901-12-31); **6**, 146-148 (1902-01-01–1902-06-22); **7**, 194-197 (1902-07-01–1902-12-20); **8**, 228-232 (1902-12-28–1903-06-25); **9**, 272-274 (1903-07-01–1903-12-28); **10**, 298-301 (1904-01-03–1904-06-26); **11**, 322-325 (1904-07-01–1904-12-30); **12**, 2-6 (1905-01-03–1905-06-30); **13**, 30-33 (1905-07-01–1905-12-29); **14**, 62-67 (1906-01-02– 1906-06-27); **15**, 106-110 (1906-07-04–1906-12-26); **16**, 154-158 (1907-01-01–1907-06-30); **17**, 188-192 (1907-07-01–1907-12-30); **18**, 224-228 (1908-01-01–1908-06-27); **19**, 254-258 (1908-07-01–1908-12-30); **20**, 288-296 (1909-01-02–1909-06-30); **21**, 338-344 (1909-07-01–1909-12-31); **22**, 376-381 (1910-01-01–1910-06-30); **23**, 2-10 (1910-07-02–1910-12-31); **24**, 49-54 (1911-01-01–1911-06-30); **25**, 100-110 (1911-07-01–1911-12-31); **26**, 164-172 (1912-01-01–1912-06-30); **27**, 230-237 (1912-07-01–1912-12-29).
06., 12.1903 used in Strasbourg's "Von den Instrumenten . . . " and "Verzeichnis der im . . . ," see 60.
Monthly Bulletin from 01.1913–
Used in the BAASSC (1913–1917) 1913–1915.

208. St. Helena

Shide Circular **24**, 82 (1911-02-18–1911-06-25).
Used in the BAASSC (1913–1917) 1914.

209. Stonyhurst College (Blackburn)

Shide Circular **21**, 353-355 (1909-07-06–1909-12-31); **22**, 393-395 (1910-01-01–1910-06-30); **23**, 15-17 (1910-07-02–1910-12-31); **24**, 60-61 (1911-01-01–1911-06-28); **25**, 115-116 (1911-07-01–1911-12-31); **26**, 175-177 (1912-01-04–1912-06-29); **27**, 243-245 (1912-07-01–1912-12-29).
Earthquake records by Milne seismograph meridian boom, Stonyhurst College Observatory 1913.
At ISC: 07.1914–08.1916, 01.1917–02.1918, 1920.
BGS: 07.1909–02.1917, 1920.
NOAA: 07.1909–03.1916, 09.1916–03.1917, 1920.
Used in the BAASSC (1913–1917) 1913–1915.

210. United Kingdom

Davison Charles (1891–1893). On the British earthquakes of [1889–1892], Geolog. Mag. ***8****, 57-67, 306-316, 364-372; Ibid., Geolog. Mag.* ***8****, 450-455; Ibid., Geolog. Mag.* ***9****, 299-305; Ibid., Geolog. Mag.* ***10****, 291-302.*
Davison Charles (1900). On some minor British earthquakes of the years 1893–1899. Geolog. Mag. ***17****, 164-177.*
Davison, Charles (1903). On the British earthquakes of the years 1889–1900. Beiträge zur Geophysik **5**, 242-313.
Davison, Charles (1908). On the British earthquakes of the years 1901–1907. Beiträge zur Geophysik **9**, 441-504.
BGS: Meteorological office, 1913-1920.

211. Warley (Birmingham)

Used in the BAASSC (1913–1917) 1914.

212. West Bromwich

Shide Circular **21**, 355-356 (1909-07-03–1909-12-10); **22**, 395-397 (1910-01-01–1910-06-30); **23**, 17-19 (1910-07-02–1910-12-30); **24**, 61-62 (1911-01-02– 1911-06-17); **25**, 129-132 (1911-07-01–1911-12-31); **26**, 177-178 (1912-01-04–1912-06-29).
Used in the BAASSC (1913–1917) 1913–1915.
09.1908–06.1911 station bulletins in Lapworth Museum.

213. Woodbridge Hill, Guildford

Shide Circular **22**, 391-392 (1910-01-01–1910-06-30); **23**, 14-15 (1910-07-05–1910-12-29); **24**, 58-59 (1911-01-01–1911-06-28); **25**, 120-122 (1911-07-01–1911-12-31); **26**, 178-180 (1912-01-04–1912-06-29); **27**, 239-241 (1912-07-01–1912-12-24).
Used in the BAASSC (1913–1917) 1913–1915.
BGS: 1910–1915.
NOAA: 1912, 1915.

214. Albany, New York

Annual reports in "Report of the Director of the State Museum," 1906–1912, from: Woodworth, J.B. (1917), details see 219.

215. Ann Arbor (Detroit Observatory), Michigan

*Publications of the Astronomical Observatory of the University of Michigan **1**, 1912, 54-72.*
NOAA: 01.1912–12.1915.

216. Baltimore

Shide Circular **4**, 112 (1901-04-05–1901-06-13); **5**, 138-139 (1901-04-05–1902-01-01); **6**, 163-164 (1902-01-01–1902-05-25); **7**, 211 (1902-06-08–1902-12-16); **8**, 249 (1903-01-04–1903-06-02); **9**, 281-282 (1903-07-09–1903-12-30); **11**, 336-338 (1904-01-01–1904-12-30); **12**, 18 (1905-01-04–1905-04-04); **13**, 49 (1905-06-14–1905-12-27); **14**, 90 (1906-01-03–1906-02-19); **15**, 135-136 (1906-05-17–1906-12-26); **17**, 213-214 (1907-01-01–1907-07-01); **18**, 246 (1907-07-20–1907-11-21 and 1908-02-01–1908-05-15); **20**, 324- 325 (1908-06-30–1908-12-28 and 1909-01-23–1909- 06-03); **22**, 416-417 (1909-06-27–1909-12-09); **23**, 32 (1910-01-22–910-12-23); **24**, 84 (1911-01-03–1911-06-15).
06.–03.1904 used in Strasbourg's "Von den Instrumenten . . ." and "Verzeichnis der im . . . ," see 60.
*Reid, Harry Fielding. Records of Seismographs. Terrestrial Magazine **10**, No. 2, 4.*
1904 in: Reid, Harry Fielding. Records of Seismographs. Terrestrial Magnetism and Atmospheric Electricity, 1905.
Used in the BAASSC (1913–1917) 1913.

217. Berkeley

Preliminary report of the State Earthquake Investigation Commission, 1906.
H.O. Wood, Records from Oct. 30, 1911, in Univ. Calif. Publications, Bull. of the Seismographic Stations.
The registration of earthquakes at the Berkeley Station and at the Lick Observatory Station, 1910–1920.
Used in the BAASSC (1913–1917) 1915.
BGS: 1911–1920.
NOAA: 11.1910–12.1920.

218. Buffalo (Canisius College), New York

Wessling, Henry J. (1910). Jesuit seismological service record of the earthquake station, Canisius College, Buffalo, June–September 1910. Monthly Weather Review 1910.
Repetti, William C. (1910, 1911). Jesuit seismological service record of the Canisius College, Buffalo. Monthly Weather Review October–December 1910; January–August 1911.
Ahern, Michael J. (1911). Jesuit seismological service record of the Canisius College earthquake station, Buffalo, September–December 1911. Monthly Weather Review 1911.
NOAA: 05.–09.1911.
Curtin, John A. (1915, 1916). Seismological Report, Canisius College, Buffalo, New York, Monthly Weather Report, January–December 1915; January–May, November 1916.

219. Cambridge (Harvard University), Massachusetts

Woodworth, J.B. (1909). Report of the Harvard seismographic station. Annual Report. Museum of Comparative Zoölogy. Cambridge, Mass., 1908–1909, 28-32.
Woodworth, J.B. (1910). Second annual report of the Harvard seismographic station. Ibid., 1910, 27-34.
See US-WB, 1914–1920.
Woodworth, J.B. (1917). Seventh annual report of the Harvard seismographic station. Annual Report. Museum of Comparative Zoölogy. Cambridge, Mass., 1917, 111-161; including "Seismographic Stations," 151-161.
At ISC: 01.–05.1913, 07.1913–05.1916, 03.–06.1917, 01.1918–11.1919, 01.–05., 10.–12.1919, 06.–09.1920.
Used in the BAASSC (1913–1917) 1913–1915.
NOAA: annual bulletins 04.1908–12.1915.
NOAA: preliminary 01.1911–05.1916, 03., 04., 06.1917, 01.1918–05.1919, 01.–06., 08., 09.1920.

220. Cheltenham, Maryland

Shide Circular **13**, 52-53 (1904-12-02–1905-06-30).
1904 in: Reid, Harry Fielding. Records of Seismographs. Terrestrial Magnetism and Atmospheric Electricity, 1905.
Hazard, Daniel L. (1910–1922). Results of Observations made at the [United States] Coast and Geodetic Survey Magnetic Observatory at Cheltenham, Maryland, 1905 and 1906, Department of Commerce and Labor, Coast and Geodetic Survey, pp. 92–94 [earthquake data for December 1904–1906]; *ibid.,* 1907 and 1908, pp. 90-92; *ibid.,* 1909 and 1910, pp. 90-93; *ibid.,* 1911 and 1912, pp. 96-98; *ibid.,* 1913 and 1914, pp. 96-97; *ibid.,* 1915 and 1916, pp. 110-111; *ibid.,* 1917 and 1918, pp. 114-116; *ibid.,* 1919 and 1920, pp. 94-96.
See US-WB, 1914–1920.

221. Cleveland, Ohio

Printed bulletins since 03.1911.
NOAA: 01.1911–03.1916.

222. Denver (Sacred Heart College), Colorado

Forstall, Armand W. (1909, 1910, 1911, 1915, 1916, 1917, 1918*). Jesuit seismological service record of the Sacred Heart College earthquake station of Denver, Colorado. Monthly Weather Review October 1909–January 1910; 1–12 and Special 5 (1911),* January–December 1915; 1916; January–July, September–December 1917; February–June, August–November 1918.
Forstall, Armand W. (1919, 1920). Seismological report, Sacred Heart College earthquake station. Monthly Weather Review April–December 1919; January–April, June. September–December, 1920.
NOAA: 08.1911–12.1912, 03.1913–12.1915, 03.–06., 08., 09.1916, 11.1916–02.1917, 04.1919.

223. Fordham, New York

Repetti, William C. (1915, 1916, 1918). Seismological record, Fordham University, New York. Monthly Weather Review

February–June, September–November 1915; April, June, September–October 1916; January–February 1918.
Sullivan, Daniel H. (1917, 1918). Seismological Report, Fordham University, New York. Monthly Weather Review January, December 1917; April, May 1918.
See US-WB, 1914–1920.

224. Washington, D.C. (Georgetown University)

Tondorf, Francis Anthony (1915, 1916, 1917, 1918, 1919, 1920). Seismological Report of Georgetown University. Monthly Weather Report January, April–December 1915; 1916; 1917; January–November 1918; January–June, August–October, December 1919; 1920.
Tondorf, Francis Anthony (1915, 1916, 1917). Georgetown University seismological bulletin, No. 1–9, 1915; No. 10–21, 1916; No. 22–25, 1917.
Tondorf, Francis Anthony (1916, 1917, 1918, 1919, 1920). The registration of earthquakes and press dispatches on earthquakes, Georgetown University, 13th series, 1916; 14th series, No. 4, 1917; 15th series, No. 2, 1918; 16th series, No. 2, 1919; 17th series, 1920.
At ISC: 1919, 1920.
NOAA: 12.1915–12.1920.
BGS: 1916–1920.

225. Honolulu, Hawaiian Islands

1904 in: Reid, Harry Fielding. Records of Seismographs. Terrestrial Magnetism and Atmospheric Electricity, 1905.
Hazard, Daniel L. (1910–1922). Results of observations made at the United States Coast and Geodetic Survey Magnetic Observatory near Honolulu, Hawaii, 1905 and 1906. Department of Commerce and Labor, Coast and Geodetic Survey, pp. 90-95 [earthquake data for October 1903–1906]; *ibid.,* 1907 and 1908, pp. 90-95; *ibid.,* 1909 and 1910, pp. 90-94; *ibid.,* 1911 and 1912, pp. 94-99; *ibid.,* 1913 and 1914, pp. 98-105; *ibid.,* 1915 and 1916, pp. 96-101; *ibid.,* 1917 and 1918, pp. 98-104; *ibid.,* 1919 and 1920, pp. 92-107.
Shide Circular **13**, 55-56 (1904-07-23–1905-07-01); **14**, 91-94 (1903-04-03–1904-06-27); **15**, 140-143 (1905-07-03–1906-12-26); **17**, 216-218 (1907-01-01–1907-12-30); **19**, 280-282 (1908-01-01–1908-12-28); **20**, 332-333 (1909-01-03–1909-06-28); **21**, 371-372 (1909-07-07–1909-12-30); **22**, 411-412 (1910-01-01–1910-06-30); **23**, 39-41 (1910-07-03–1910-12-30); **24**, 93-94 (1911-01-01–1911-06-28); **25**, 160-161 (1911-07-01–1911-12-31); **26**, 214-215 (1912-01-04–1912-06-29); **27**, 279-280 (1912-07-07–1912-12-29).
See US-WB, 1914–1920.

226. Honolulu (Oahu College), Hawaii

Shide Circular **6**, 181 (1901-12-30–1902-01-24); station moved to 225.

227. Ithaca, New York

Mimeographed bulletins from 01.1912.
NOAA: 03.1912–02.1915, 06.1905–08.1917.

228. Kilauea, Hawaii

*Weekly bulletin of Hawaiian volcano observatory **2**, 1914 from: Woodworth, J.B. (1917), details see 219.*

229. Lawrence, Kansas

See US-WB, 1914–1920.

230. Mobile (Spring Hill), Alabama

Ruhlmann, Cyril (1910, 1911, 1912). Jesuit seismological service record of the earthquake station at Mobile, Alabama, No. 1–6, 1910; No. 1–12, 1911; special 3 and No. 13–146, 1912. Monthly Weather Review, 1910–1912.
Ruhlmann, Cyril (1918, 1919, 1920). Seismological report of Spring Hill College, Mobile, Alabama. Monthly Weather Review October 1918; April, December 1919; January 1920.
At ISC: 05.1920–12.1920.
NOAA: 1911, 01.–08., 12.1912, 04.1919–12.1920.

231. Mt. Hamilton (Lick Observatory), California

*Lick Observatory Bulletin, **1**, 1901.*
06.1903 used in Strasbourg's "Von den Instrumenten . . . ," see 60.
1904 in: *Reid, Harry Fielding. Records of Seismographs. Terrestrial Magnetism and Atmospheric Electricity, 1905.*
1910–1920, see Berkeley 217.
Used in the BAASSC (1913–1917) 1914–1915.

232. New Orleans (Loyola University), Louisiana

Frankhauser, Joseph B. (1911). Jesuit seismological society record of the Loyola University earthquake station, New Orleans, Louisiana. Monthly Weather Review, No. 6–12, 1912.

233. Northfield, Vermont

See US-WB, 1914–1920.

234. Santa Clara, California

Ricard, Jerome S. (1910, 1911, 1912, 1913). Jesuit seismological service record of the earthquake station, Santa Clara, California., No. 1–29, 1910; No. 48–85, 1911; special 36 and No. 86–109, 1912; No. 110–124, 1913. Monthly Weather Review 1910–1913.
Printed bulletin from 06.1911.
Ricard, Jerome S. Record of the seismograph station, University of Santa Clara, California, 1914–1919.
At ISC: J.S.A. Sta. Clara, California 09.1911–05.1914, 09.–11.1914, 01.1915–06.1916.
Used in the BAASSC (1913–1917) 1913–1914.
NOAA: 06.1911–06.1915, 09.1915–06.1916.

235. Seattle, Washington

From 03.1910 occasional reports on observed seismic onsets (cited after Woodworth, J.B., 1917, details see 219).

236. Sitka, Alaska

Shide Circular **13**, 53-54 (1904-05-02–1904-12-20).
1904 in: *Reid, Harry Fielding. Records of Seismographs. Terrestrial Magnetism and Atmospheric Electricity, 1905.*
Registrierungen im Jahre 1905, Sitka, Alaska. In: Szirtes (1909b), p. 68.
Hazard, Daniel L. (1910–1922). Results of observations made at the United States Coast and Geodetic Survey Magnetic Observatory at Sitka, Alaska, 1905 and 1906, Department of Commerce and Labor, Coast and Geodetic Survey, pp. 92-94 [earthquake data for May 1904–1906]; *ibid.,* 1907 and 1908, pp. 92-94; *ibid.,* 1909 and 1910, pp. 92-95; *ibid.,* 1911 and 1912, pp. 96-100; *ibid.,* 1913 and 1914, pp. 98-99; *ibid.,* 1915 and 1916, pp. 94-95; *ibid.,* 1917 and 1918, pp. 100-101; *ibid.,* 1919 and 1920, p. 98.
Typewritten bulletins 1913, 1914.
See US-WB, 1914–1920.

237. Spokane (Gonzaga College), Washington

Bacigalupi, Eugene M. (1910, 1911). Jesuit seismological service record of the Gonzaga College earthquake station, Spokane, Washington, No. 1–15, 1910; No. 1–6, 1911. Monthly Weather Review 1910, 1911.
NOAA: 01.–03., 07.–09.1911.

238. St. Louis, Missouri

Joliat, Joseph S. (1911). Seismology in St. Louis University–earthquakes registered in St. Louis University observatory during 1910. Bull. St. Louis University ***7***, 32-33.
Goesse, John B. (1912). Record of the earthquake station, St. Louis University.
Corey, Anthony H., and J.B. Goesse (1912). Jesuit seismological service record of the earthquake station, St. Louis University. Bull. St. Louis University ***8***, 77-86.
Goesse, John B. (1914). Record of the earthquake station, St. Louis University.
Goesse, John B., G.E. Rueppel, and J. Roubik (1914). Geophysical observatory, seismological and meteorological departments. Earthquake records for 1913. Bull. St. Louis University ***10****, 54-60, 61-89.*
Goesse, John B. (1915–1917). Seismological report, geophysical observatory, St. Louis University. Monthly Weather Review January–July, September–December 1915; January–June, August, October–November 1916; January–August, November, December 1917.
Goesse, John B. (1915, 1916, 1917). Record of the earthquake station, St. Louis University.
Goesse, John B. (1918, 1919). Seismological report, geophysical observatory, St. Louis University. Monthly Weather Review January–November 1918; April–May 1919.
Rueppel, George E. (1919, 1920). Seismological Report, St. Louis University, 1919–1920.
At ISC: 11.1910–08.1913, 10.–12.1913.
NOAA: 01.1910–12.1920.
Used in the BAASSC (1913–1917) 1913–1915.

239. Tucson, Arizona

Hazard, Daniel L. (1912–1923). Results of observations made at the United States Coast and Geodetic Survey Magnetic Observatory near Tucson, Arizona, 1909 and 1910, p. 58. Department of Commerce, United States Coast and Geodetic Survey; *ibid.,* 1911 and 1912, pp. 100-103; *ibid.,* 1913 and 1914, pp. 100-102; *ibid.,* 1915 and 1916, pp. 98-100; *ibid.*, 1917 and 1918, pp. 98-100; *ibid.,* 1919 and 1920, pp. 95-97.
See US-WB, 1914–1920.
NOAA: 09.1910–12.1920.

240. USA

McAdie, A.G. (1907). Catalogue of earthquakes on the Pacific Coast, 1897–1906. Smithonian Miscellaneous Collections ***49****, No. 1721, 24 pp.*
Report of the State Earthquake Investigation Commission 1.1906, 2.1906, Carnegie Institution Publication ***87.***

241. Washington, D.C.

ISA: U.S. Weather Bureau, Monthly Weather Review 1904.
1904 in: *Reid, Harry Fielding. Records of Seismographs. Terrestrial Magnetism and Atmospheric Electricity, 1905.*
06.1903 used in Strasbourg's "Von den Instrumenten . . . ," see 60.
ISA: Marvin, C.F. (1907). Distant earthquakes recorded at the Weather Bureau during the year 1906. Monthly Weather Review ***36***,No. 13*, Washington 1907.*
See US-WB, 1914–1920.

242. Tashkent (Taschkent, Taškent)

05.–08., 12.1903, 02., 03.1904 used in Strasbourg's "Von den Instrumenten . . . " and "Verzeichnis der im . . . ," see 60.
Notice mensuelles sur le tremblements de terre, Observatoire de Tachkent 1908.
Bulletin of Imperial Russia 1902–1908, see 168.
At ISC: 03.–08.1907, 10.1907–03.1908, 09.–12.1909, 01.–12.1913, 02.–05.1914.
Seismological Bulletin (weekly): 1.1912 (September 14.1912)–66.1913, 2.–18.1914.
Used in the BAASSC (1913–1917) 1913–1915.
NOAA: 09.1912–05.1914.
BGS: 1912–1913.

243. Belgrad (Beograd, Belgrade)

ISA: 1906–1908 weekly listings.
At ISC: 01.–10.1907, 01.1908–10.191.
NOAA: 1901–1906, 01., 04.–07.1909, 01.–06.1910.

244. Serbia

In Hamburg: Mikailović, J. Die Erdbeben in Serbien 1901–1907.

245. Binza (Leopoldville)

NOAA: 1909–1920.

Appendix: Seismographs 1856–1910

The most important part in studying seismic waves of the Earth is of course the instrumentation used to make these measurements. Therefore, we wish to provide information about the most important instruments in seismology, i.e., seismoscopes and seismographs. A comprehensive overview of early seismoscopes and seismographs that were in use before 1900 can be found in Ehlert (1898). This article contains numerous sketches of these instruments, illustrating their principles and describing their advantages and disadvantages. The classic 1914 monograph, *Vorlesungen über Seismologie* by B. Galitzin, contains many figures illustrating most of the important seismographs invented in the first decade of the 20th century and of which many were in use for during the following decades. Charles R. Hutt (USGS) contributed a set of pictures of modern seismometers and recorders used at seismic stations world-wide. The above cited materials and additional information are given as computer readable files on the attached Handbook CD #3, under the directory of \88Schweitzer.

The following ten figures illustrate some of most popular seismographs that were introduced from about 1856 to 1910. For references of these figures, please see the archived files on the CD.

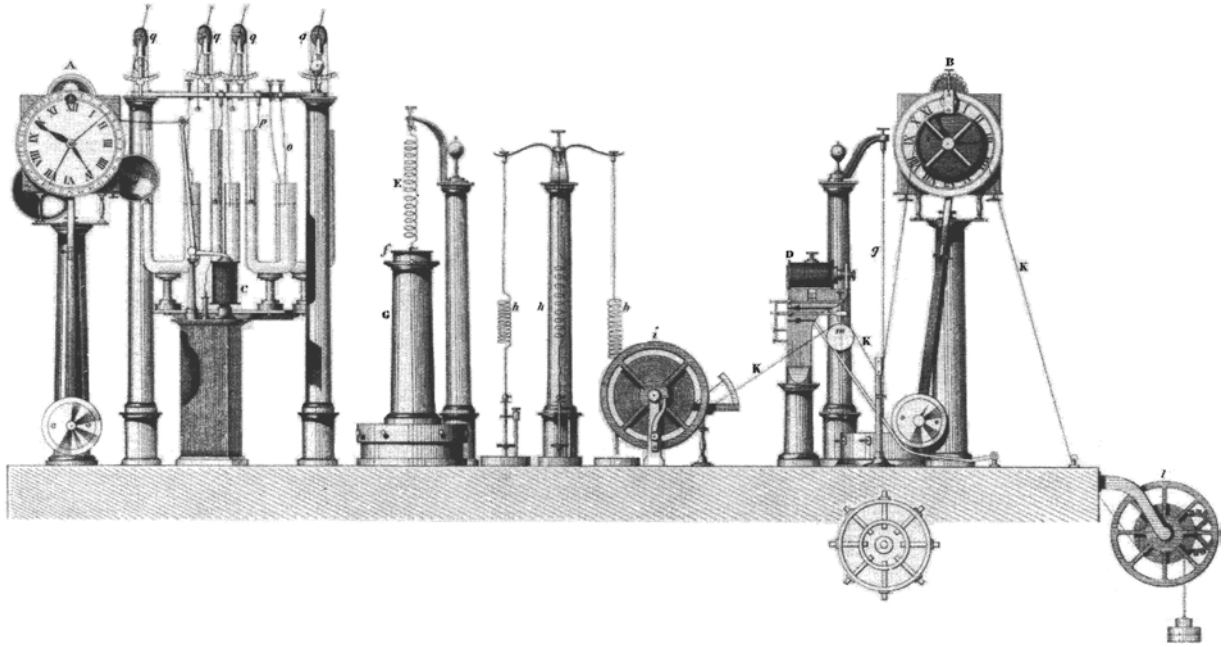

FIGURE 13 Palmieri's "Seismgrafo elettro-magnetico" (after Ferrari, 1990).

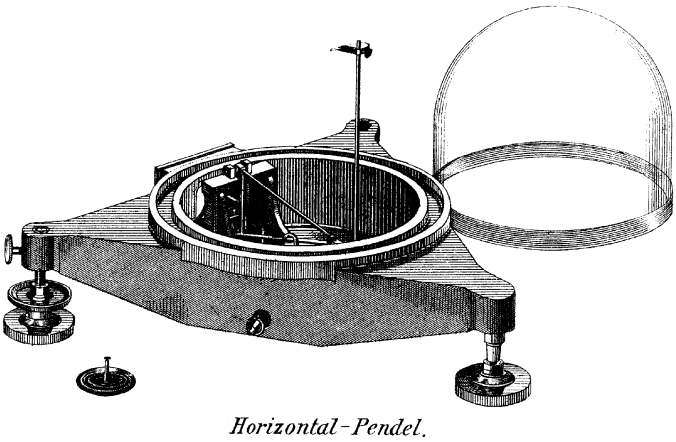

FIGURE 14 The drawing shows a Rebeur-Paschwitz Horizontal Pendulum as it was installed in Potsdam, Germany and in Wilhelmshaven, Germany in 1889 (after Rebeur-Paschwitz, 1892).

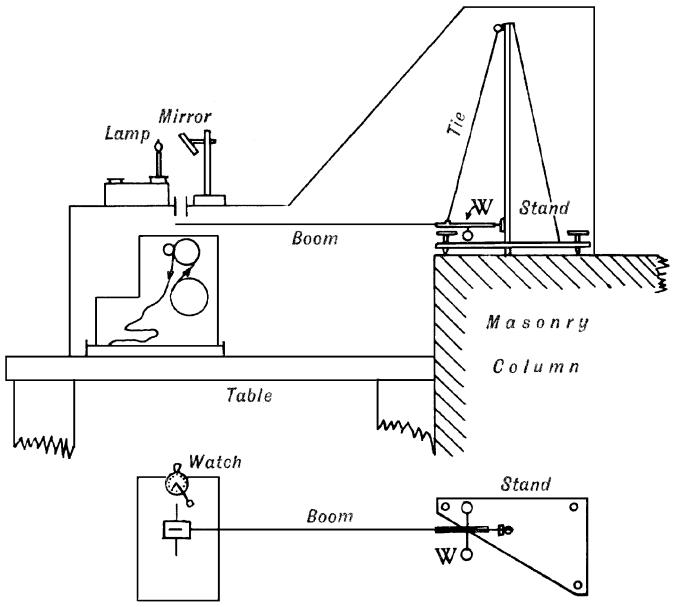

FIGURE 15 The Milne horizontal seismograph (after Dewey and Byerly, 1969).

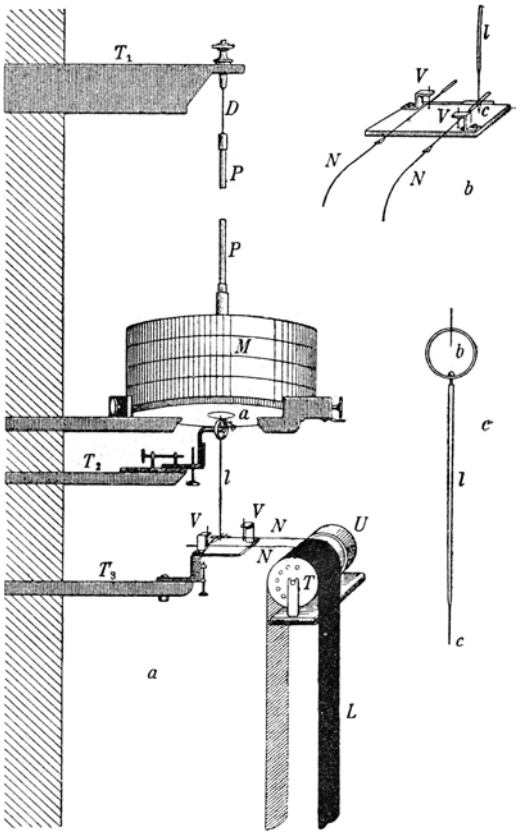

FIGURE 16 A drawing of a Vicentini vertical pendulum (after Galitzin, 1914).

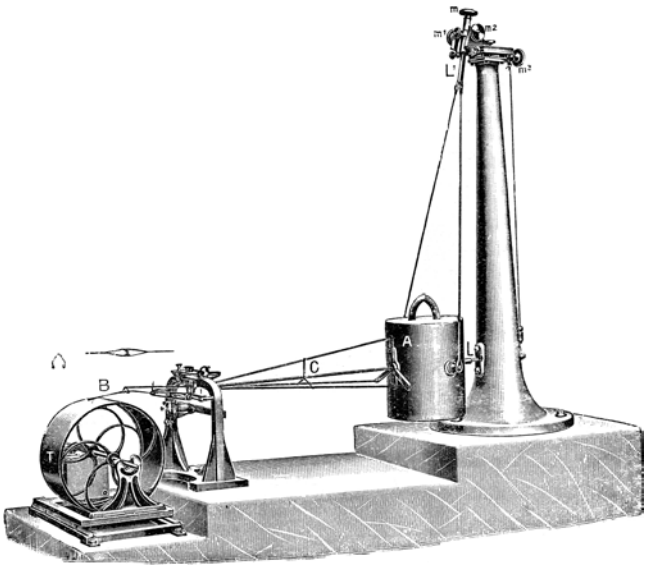

FIGURE 17 A drawing of a Bosch-Omori *Strassburger Schwerpendel* (after Galitzin, 1914). This type of Omori's seismograph was built by the factory *J. und A. Bosch* in Strasbourg.

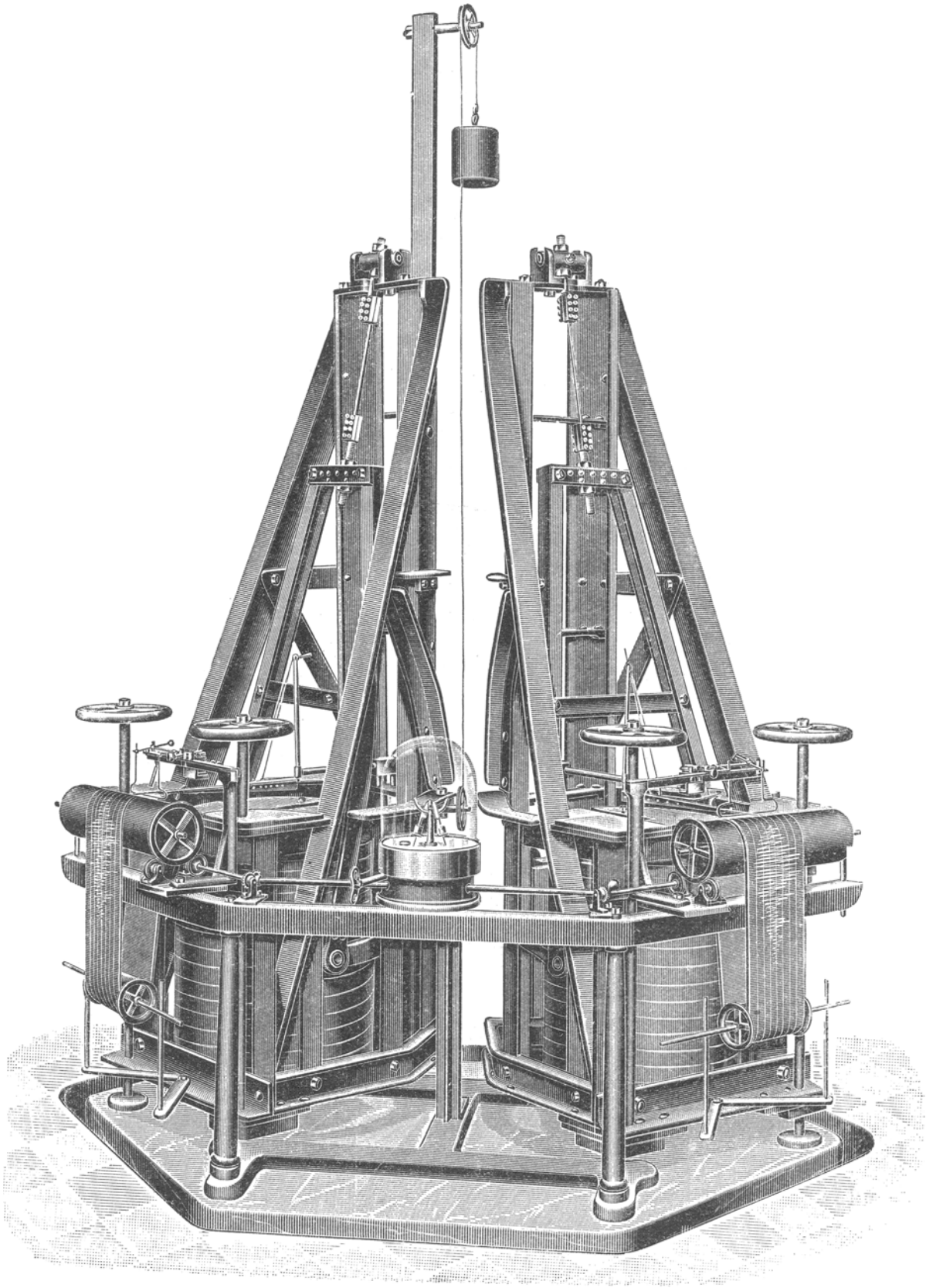

FIGURE 18 A drawing of a complete set of Mainka Horizontal Pendula (after Galitzin, 1914). These Mainka seismographs were also built by the factory *J. und A. Bosch* in Strasbourg.

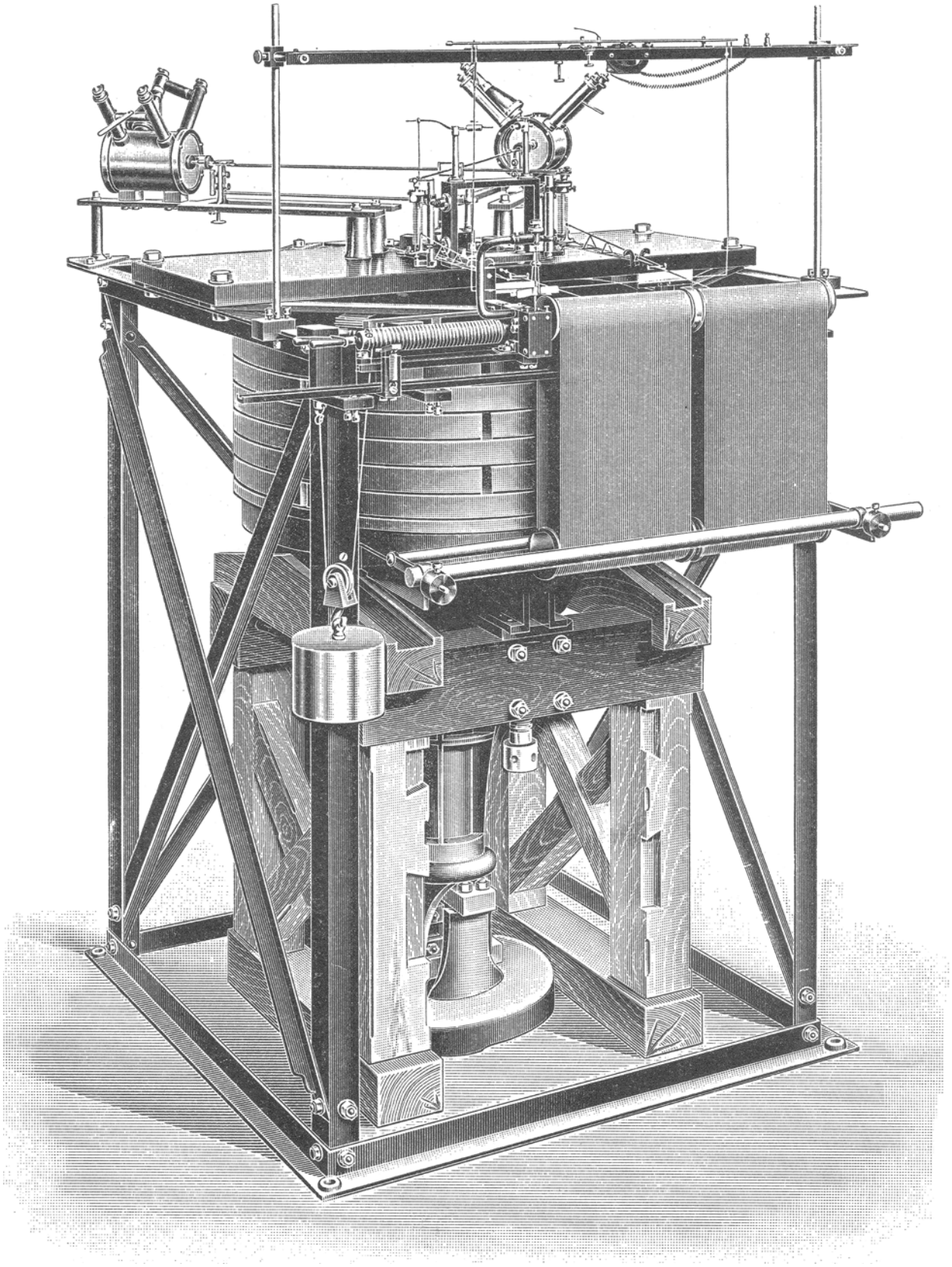

FIGURE 19 A drawing of a Wiechert Astatic Horizontal Pendulum (after Galitzin, 1914).

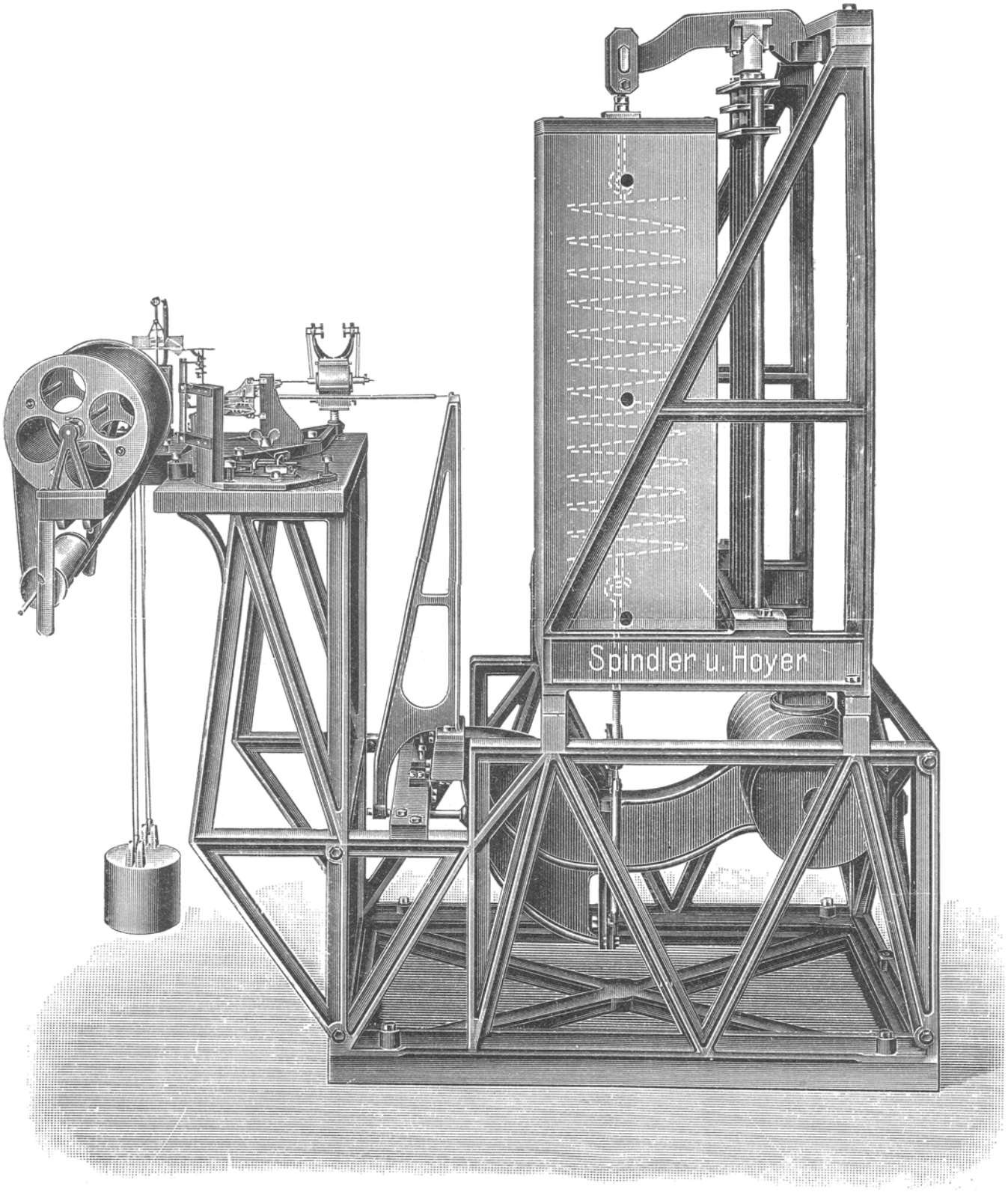

FIGURE 20 A drawing of a Wiechert Vertical Pendulum (after Galitzin, 1914).

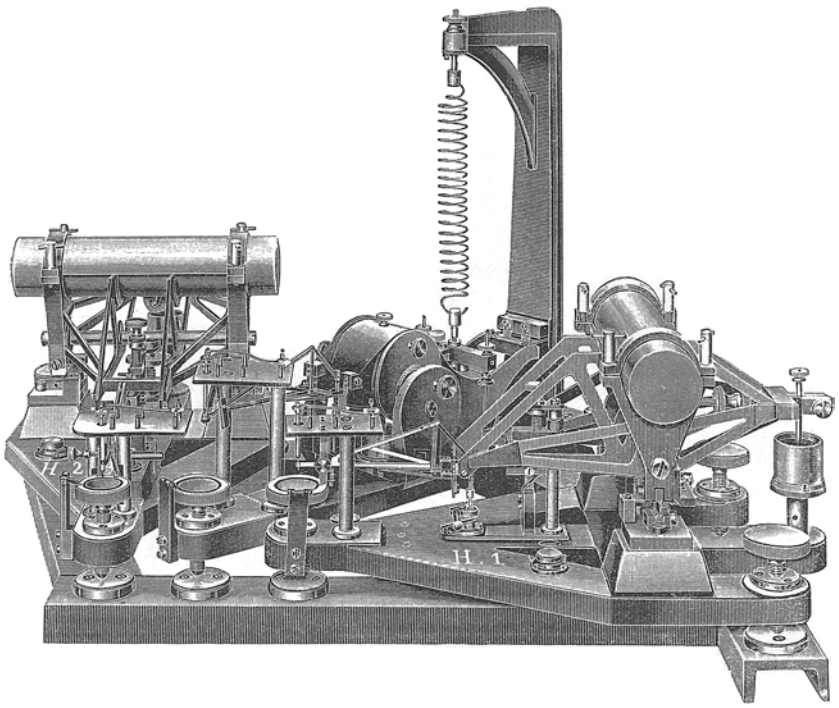

FIGURE 21 A drawing of Mintrop/Wiechert Mobile Seismometers built to observe higher frequencies in all three components (after Galitzin, 1914).

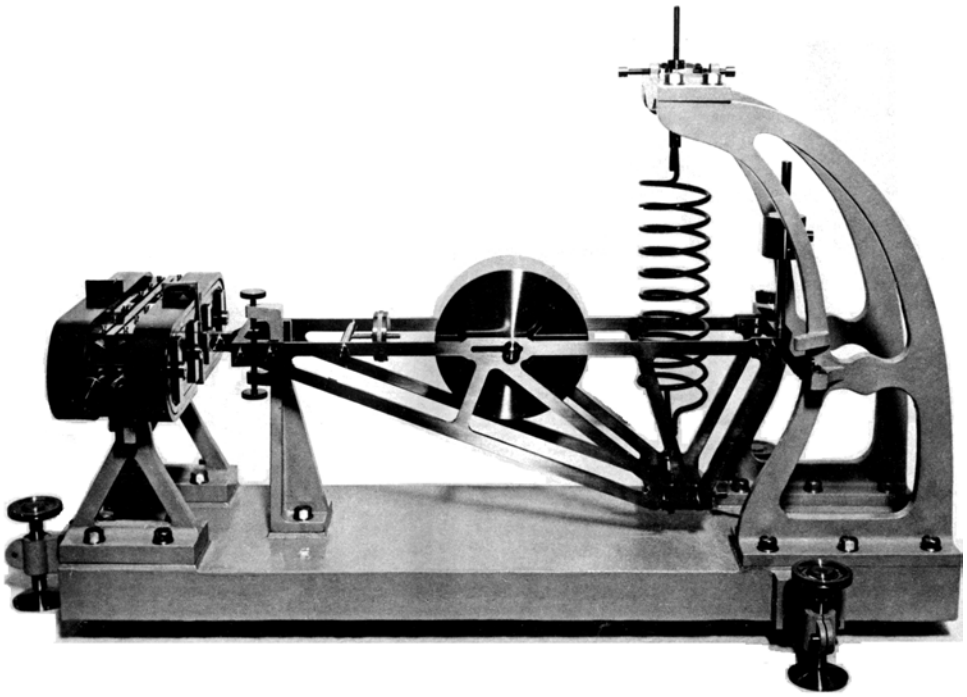

FIGURE 22 A picture of a Galitzin Vertical Pendulum (after Galitzin, 1914).